MILLTRONICS
CNC MACHINES

ML22G Mechanical Manual

Parts Drawings and Lists

5-28-2013
Rev 2

Milltronics Manufacturing Company
1400 Mill Lane
Waconia, MN USA 55387
952-442-1410

PARTS LIST

1. MANUAL DISCREPANCY SHEET IV
2. HEADSTOCK DRAWING A (A1-8, 3" BORE) 1
3. HEADSTOCK DRAWING B (D1-8, 3" BORE) 4
4. HEADSTOCK DRAWING C (DIN55027, 3" BORE) 7
5. HEADSTOCK DRAWING D (D1-8, 4" BORE) 10
6. HEADSTOCK DRAWING E (A1-11, 4" BORE) 13
7. HEADSTOCK DRAWING F (A2-11, 6" BORE-ONLY FOR ML26) 16
8. C-AXIS (HEADSTOCK A1-8, D1-8, DIN55027, 3" BORE) 19
9. C-AXIS (HEADSTOCK A1-11, D1-8, 4" BORE) 22
10. C-AXIS (HEADSTOCK A2-11, 6" BORE-ONLY FOR ML26) 25
11. SPEED CHANGE TRANSMISSION (IF EQUIPPED, SELECT* MODELS ONLY) 28
12. CARRIAGE & CROSS SLIDE 31
13. CARRIAGE & CROSS SLIDE (C-AXIS) 35
14. BED FOR 40/60/80" LENGTH 39
15. BED FOR 120" LENGTH 43
16. BED FOR 160" LENGTH 46
17. Z-AXIS FOR 120" BED LENGTH 50
18. Z-AXIS FOR 160" BED LENGTH 52
19. MANUAL TAILSTOCK 54
20. HYDRAULIC TAILSTOCK 57
21. GUARDING (40", 60", 80" BEDS, NEW STYLE) 60
22. GUARDING (120", 160" BEDS, NEW STYLE) 63
23. GUARDING – DOORS (NEW STYLE) 66
24. OPERATOR PENDANT & GUARDING (120" - 160" BED, HALF-GUARD) 70
25. GUARDING – (FOR REAR CHUCK, FULL GUARD) 72
26. GUARDING (ELECTRICAL BOX) 74
27. STEADY REST .75"-8" (OPTION) 20-200MM 76
28. STEADY REST 6-12" (OPTION) 150-300MM 78
29. FOLLOW REST (OPTION) 80
30. CHIP CONVEYOR (OPTION) 82
31. WAYLUBE PUMP MA00458 85

1. Manual Discrepancy Sheet

1. The guarding drawings are updated to reflect the new style doors and sliding console rails used beginning on this rev.

2. Headstock Drawing A (A1-8, 3” bore)

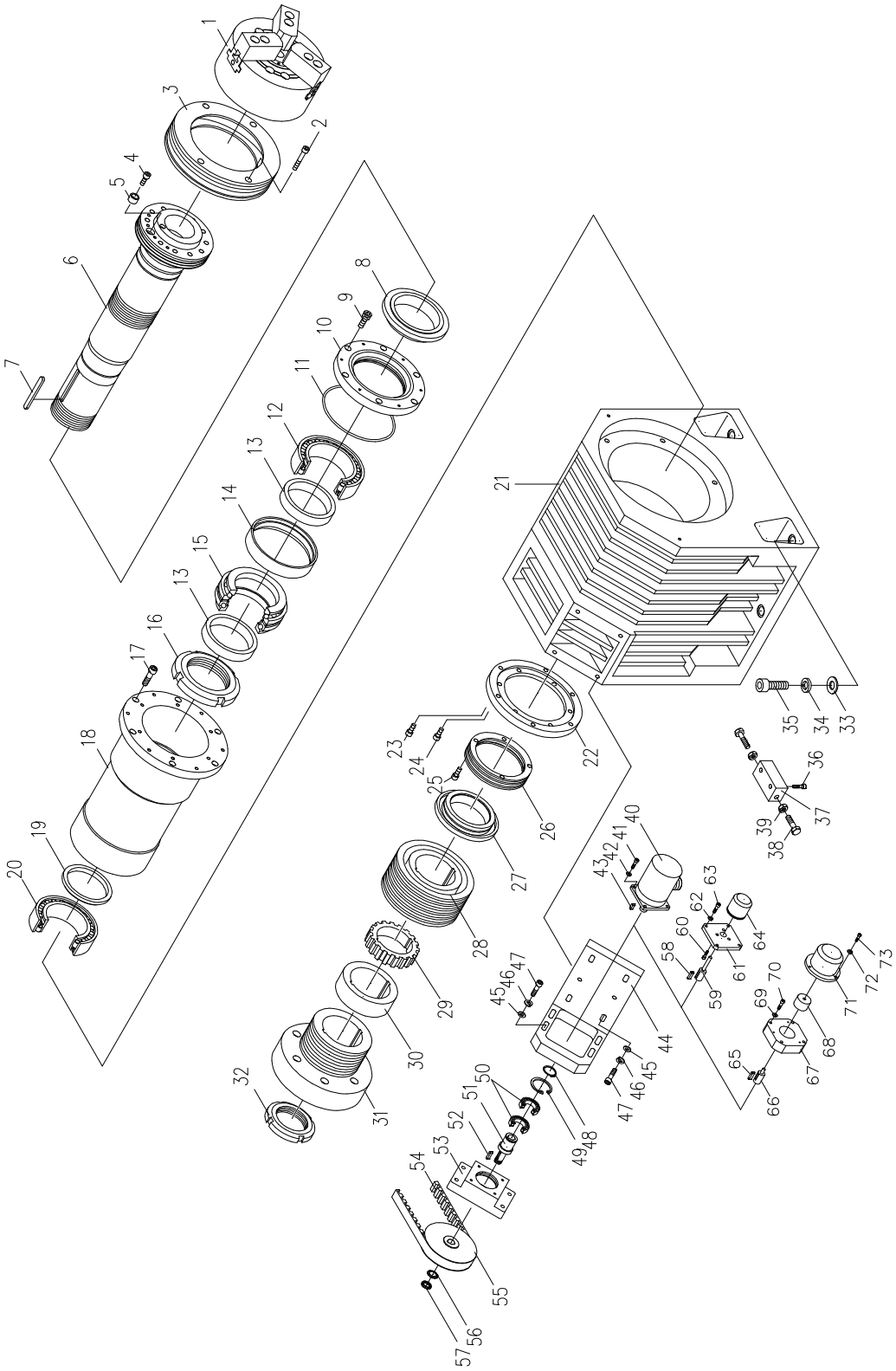

Headstock Drawing A (A1-8, 3” bore)

Item	Part no.	Description	Q'ty	Remark	Milltronics #
1		3-jaw chuck	1	SK-10 (option)	MPL-142
2	5001-A08125030	Hex. socket screw	4	M8 X P1.25 X 30L	
3	E-ARAK-01003-01	Front coupling cover	1		MLH-234
4	5001-A10150020	Hex. socket screw	1	M10XP1.5X20L	
5	E-ARAK-01015-01	Drive key	1		
6	E-ARAK-01061-01	Spindle	1	6-Groove	
7	5121-C12008160	Key (6-Groove)	2	12x8x160	
8	E-ARAK-01005-01	Seal ring	1		MPL-566
9	5001-A0812535	Hex. socket screw	6	M8XP1.25X35L	
10	E-ARAK-01004-01	Cover	1		
11		O ring	1	G-200	
12		Bearing	1	NN3024/W33	BG-146
13	E-ARAK-01006-01	Spacer	2		
14	E-ARAK-01017-01	Spacer	1		
15	E-ARAK-01018-01	Bearing	1	234424B	BG-147
16		Nut	1	YSR M120X2.0	
17	5001-A10150045	Hex. socket screw	6	M10XP1.5X45L	
18	E-ARAK-01002-01	Sleeve	1		
19	E-ARAK-01007-01	Spacer	1		
20		Bearing	1	NN3022/W33	BG-148
21	E-ARAK-00001-01	Head stock	1		
22	E-ARAK-01008-01	Rear coupling cover	1		
23	5001-A08125030	Hex. socket screw	6	M8XP1.25X30L	
24	5001-A06100020	Hex. socket screw	6	M6XP1.0X20L	
25	5001-A08125030	Hex. socket screw	6	M8XP1.25X30L	
26	E-ARAK-01009-01	Rear bearing cover	1		MPL-601
27	E-ARAK-01010-01	Seal ring	1		MPL-602
28	E-ARAK-01062-01	Pulley	1	6-Groove	
	E-ARAK-01132-01	Pulley	1	6-Groove(Enlarge)	
29	E-ARAK-01012-01	Timing belt pulley	1		MLT-188
30	E-ARAK-01013-01	Spacer	1		MPL-348
31	E-ARAK-01014-01	Pulley	1	6-Groove	PY-230
	E-ARAK-01131-01	Pulley	1	6-Groove(Enlarge)	
32		Nut	1	YSK M110X2.0	
33	5071-B00000016	Washer	6	M16	
34	5081-B00000016	Spring washer	6	M16	
35	5001-B16200060	Hex. socket screw	6	M16XP2.0X60L	
36	5001-A08125035	Hex. socket screw	2	M8XP1.25X35L	
37	E-ARAK-00002-01	Adjusting block	1		
38	5002-B10150055	Hex. bolt	2	M10XP1.5X55L	

Item	Part no.	Description	Q'ty	Remark	Milltronics #
39	5051-B00010150	Nut	2	M10	MPL-870
40		Encoder (Fagor)	1	NE-1024-2MD	See #64
41	5001-B05080015	Hex. socket screw	4	M5XP0.8X15L	
42	5081-B00000005	Spring washer	4	M5	
43	5121-C05005017	Key (Fagor)	1	5X5X17	
44	E-ARAK-03031-01	Adjusting device for encoder	1		
45	5071-B00000008	washer	8	M8	45-53 in Assembly MPL-818
46	5081-B00000008	Spring washer	8	M8	
47	5001-B08125045	Hex. socket screw	8	M8XP1.25X45L	
48	5141-A00000025	C snap	1	STW-25	
49	5142-A00000047	C snap	1	RTW-47	MPL-798
50	L-0401-00102	Bearing	2	6005Z	BG-06
51	E-ARAK-03004-01	Shaft	1		
52	5121-C05005020	Key	1	5X5X20L	
53	E-ARAK-03002-01	Encoder bracket	1		
54	L-0902-00002	Timing belt	1	HTD-5M-1050-15	BT-104
55	E-ARAK-03003-01	Timing belt pulley	1		
56	5087-A00000002	Washer	1	AW-02	MLA-99
57		Nut	1	AN-02	
58		Key (Milltronics)	1	5X5X17	
59	E-ARAK-03012-01	Shaft (Milltronics)	1		
60		Hex. Socket screw	3	M3XP0.5X14L	
61	E-ARAK-03011-01	Plate (Milltronics)	1		
62		Spring washer	4	M5	
63		Hex. socket screw	4	M5XP0.8X15L	
64		Encoder (Milltronics)	1		9595 (standard) 9653 (w/orient)
65		Key (Siemens)	1	5X5X17	
66	E-ARAK-03041-01	Shaft (Siemens)	1		
67	E-ARAK-03042-01	Plate (Siemens)	1		
68		Coupling (Siemens)	1		
69		Spring washer	4	M5	
70		Hex. socket screw	4	M5XP0.8X15L	
71		Encoder (Siemens)	1	FX2001-3GB02	
72		Spring washer	3	M3	
73		Hex. socket screw	3	M3XP0.5X14L	

3. Headstock Drawing B (D1-8, 3” bore)

Model	Drive belt #’s
ML16	BT-103 795 L12
ML18	BT-99 865 L12
ML22	BT-101 975 L12
ML22*	BT-116 990 L12
ML26	BT-95 1065 L12
*	*With 5:1 belt ratio*

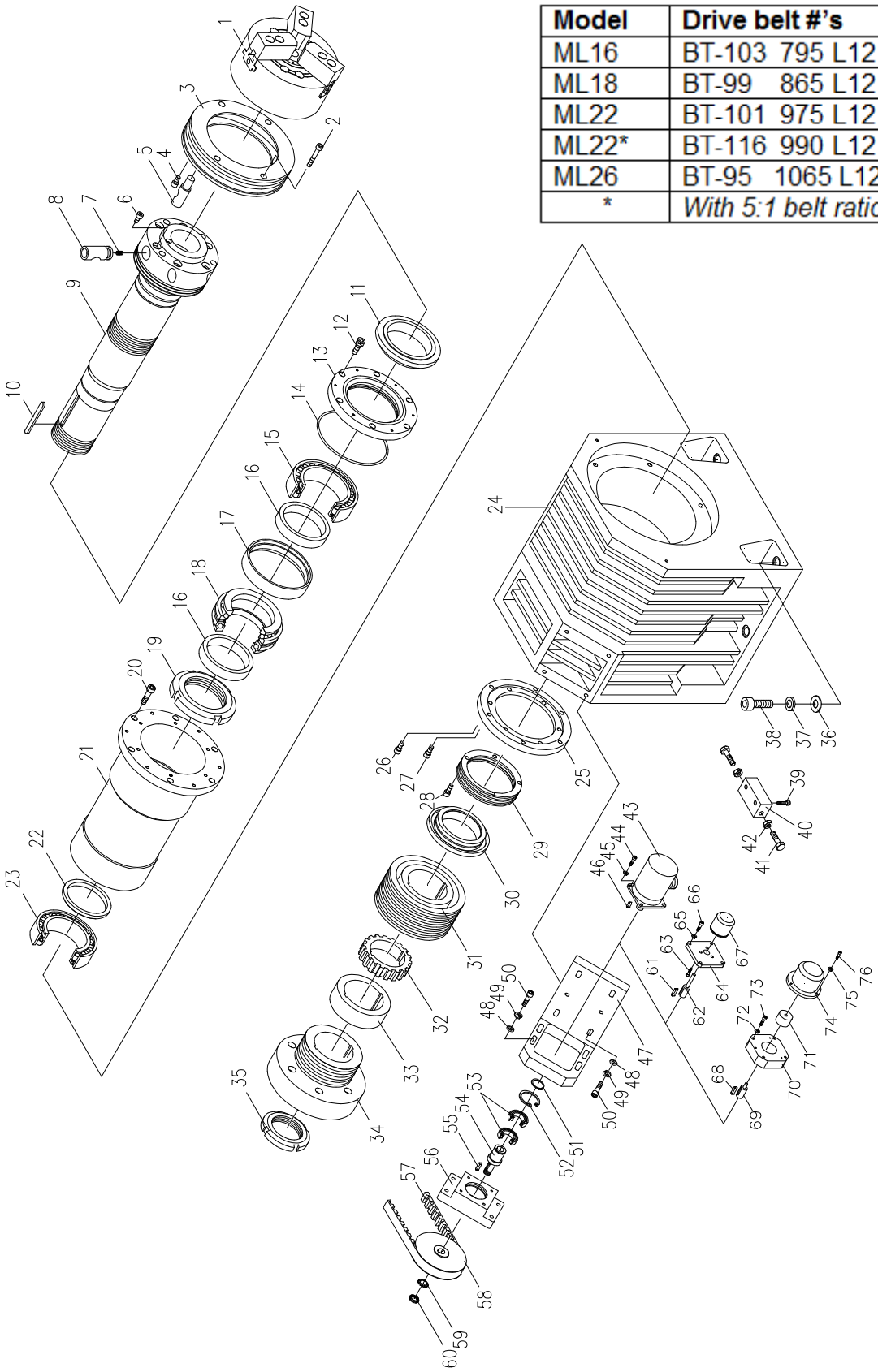

Headstock Drawing B (D1-8, 3” bore)

Item	Part no.	Description	Q'ty	Remark	Milltronics #
1		3-jaw chuck	1	SK-10 (option)	MPL-142
2	5001-A08125030	Hex. socket screw	4	M8 X P1.25 X 25L	
3	E-ARAK-01003-01	Front coupling cover	1		
4	5001-A08125016	Hex. socket screw	6	M8XP1.25X16L	
5	E-ARAK-01027-01	Studs	6		
6	E-ARAK-01028-01	Screw for cams	6		
7	E-ARAK-01029-01	Spring	6		
8	E-ARAK-01026-01	Cam	6		
9	E-ARAK-01121-01	Spindle	1	6-Groove	
10	5121-012008160	Key (6-Groove)	2	12x8x160L	
11	E-ARAK-01005-01	Seal ring	1		MPL-566
12	5001-A0812545	Hex. socket screw	6	M8XP1.25X45L	
13	E-ARAK-01004-01	Cover	1		
14		O ring	1	G-200	
15		Bearing	1	NN3024/W33	BG-146
16	E-ARAK-01006-01	Spacer	2		
17	E-ARAK-01017-01	Spacer	1		
18	E-ARAK-01018-01	Bearing	1	234424B	BG-147
19		Nut	1	YSR M120X2.0	
20	5001-A10150045	Hex. socket screw	6	M10XP1.5X45L	
21	E-ARAK-01002-01	Sleeve	1		
22	E-ARAK-01007-01	Spacer	1		
23		Bearing	1	NN3022/W33	BG-148
24	E-ARAK-00001-01	Head stock	1		
25	E-ARAK-01008-01	Rear coupling cover	1		
26	5001-A08125030	Hex. socket screw	6	M8XP1.25X30L	
27	5001-A06100020	Hex. socket screw	6	M6XP1.0X20L	
28	5001-A08125030	Hex. socket screw	6	M8XP1.25X30L	
29	E-ARAK-01009-01	Rear bearing cover	1		
30	E-ARAK-01010-01	Seal ring	1		MPL-601
31	E-ARAK-01132-01	Pulley	1	6-Groove(Enlarge)	MPL-602
32	E-ARAK-01012-01	Timing belt pulley	1		
33	E-ARAK-01013-01	Spacer	1		MLT-188
34	E-ARAK-01131-01	Pulley	1	6-Groove(Enlarge)	MPL-348
35		Nut	1	YSK M110X2.0	PY-230
36	5071-B00000016	Washer	6	M16	
37	5081-B00000016	Spring washer	6	M16	
38	5001-B16200060	Hex. socket screw	6	M16XP2.0X60L	
39	5001-A08125035	Hex. socket screw	2	M8XP1.25X35L	
40	E-ARAK-00002-01	Adjusting block	1		
41	5002-B10150055	Hex. bolt	2	M10XP1.5X55L	

Item	Part no.	Description	Q'ty	Remark	Milltronics #
42	5051-B00010150	Nut	2	M10	MPL-870
43		Encoder (Fagor)	1	NE-1024-2MD	See #67
44	5001-B05080015	Hex. socket screw	4	M5XP0.8X15L	
45	5081-B00000005	Spring washer	4	M5	
46	5121-C05005017	Key (Fagor)	1	5X5X17	
47	E-ARAK-03031-01	Adjusting device for encoder	1		47-56 in Assembly MPL-818
48	5071-B00000008	washer	8	M8	
49	5081-B00000008	Spring washer	8	M8	
50	5001-B08125045	Hex. socket screw	8	M8XP1.25X45L	
51	5141-A00000025	C snap	1	STW-25	
52	5142-A00000047	C snap	1	RTW-47	MPL-798
53	L-0401-00102	Bearing	2	6005Z	BG-06
54	E-ARAK-03004-01	Shaft	1		
55	5121-C05005020	Key	1	5X5X20L	
56	E-ARAK-03002-01	Encoder bracket	1		
57	L-0902-00002	Timing belt	1	HTD-5M-1050-15	BT-104
58	E-ARAK-03003-01	Timing belt pulley	1		
59	5087-A00000002	Washer	1	AW-02	MLA-99
60		Nut	1	AN-02	
61		Key (Milltronics)	1	5X5X17	
62	E-ARAK-03012-01	Shaft (Milltronics)	1		
63		Hex. Socket screw	3	M3XP0.5X14L	
64	E-ARAK-03011-01	Plate (Milltronics)	1		
65		Spring washer	4	M5	
66		Hex. socket screw	4	M5XP0.8X15L	
67		Encoder (Milltronics)	1		9595 (standard) 9653 (w/orient)
68		Key (Siemens)	1	5X5X17	
69	E-ARAK-03041-01	Shaft (Siemens)	1		
70	E-ARAK-03042-01	Plate (Siemens)	1		
71		Coupling (Siemens)	1		
72		Spring washer	4	M5	
73		Hex. socket screw	4	M5XP0.8X15L	
74		Encoder (Siemens)	1	FX2001-3GB02	
75		Spring washer	3	M3	
76		Hex. socket screw	3	M3XP0.5X14L	

4. Headstock Drawing C (DIN55027, 3” bore)

Model	Drive belt #’s
ML16	BT-103 795 L12
ML18	BT-99 865 L12
ML22	BT-101 975 L12
ML22*	BT-116 990 L12
ML26	BT-95 1065 L12
*	*With 5:1 belt ratio*

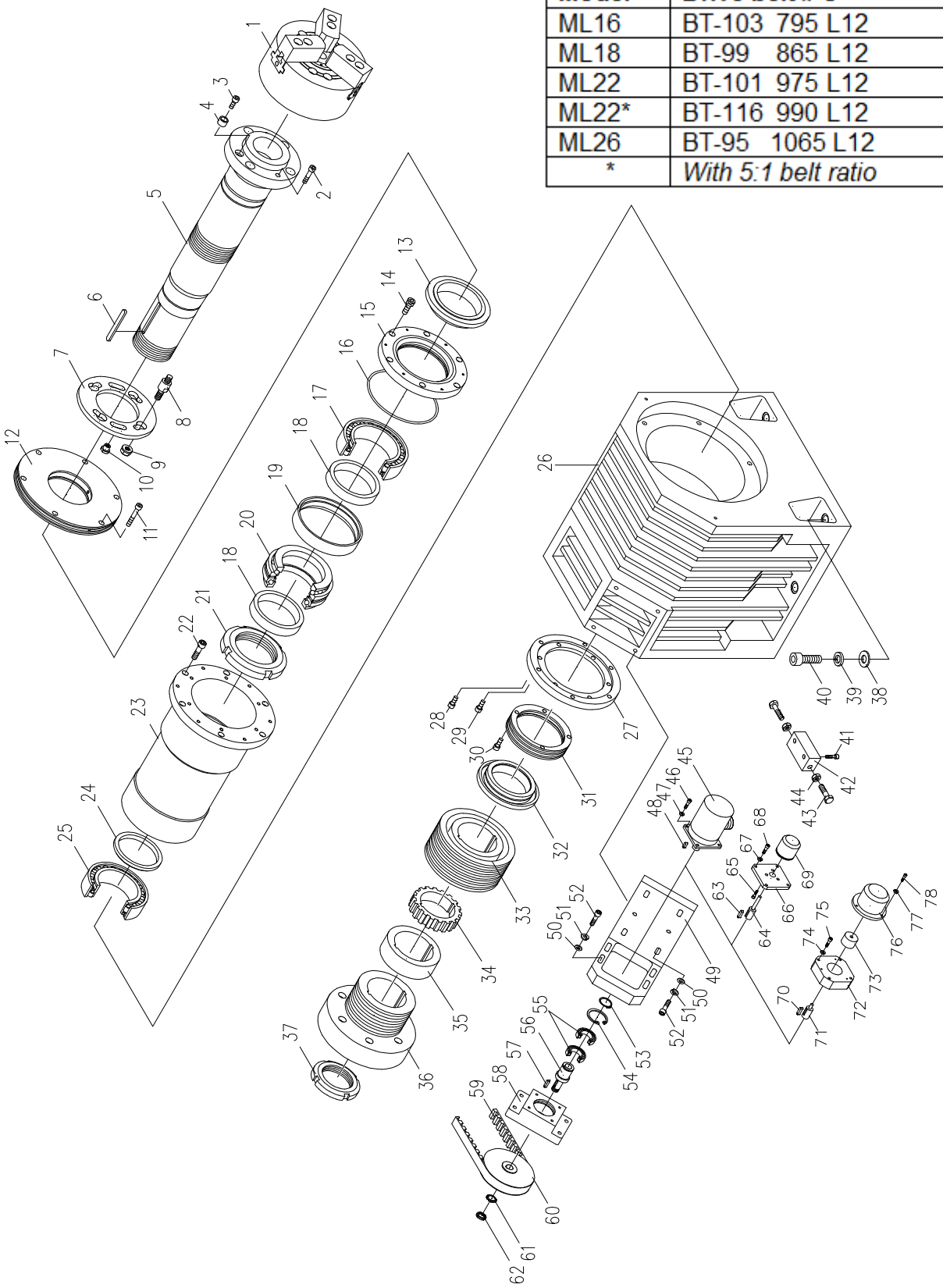

Headstock Drawing C (DIN55027, 3” bore)

Item	Part no.	Description	Q'ty	Remark	Milltronics #
1		3-jaw chuck	1	SK-10 (option)	MPL-142
2	5001-A10150035	Hex. socket screw	2	M10 X P1.5 X 35L	
3	5001-A08125020	Hex. socket screw	1	M8XP1.25X20L	
4	E-ARAK-01073-01	Drive key	1		
5	E-ARAK-01131-01	Spindle	1	6-Groove	
6	5121-C12008160	Key (6-Groove)	2	12x8x160L	
7	E-ARAK-01074-01	Bayonet disc	1		
8	E-ARAK-01077-01	Studs	4		
9	E-ARAK-01075-01	Nut with collars	4		
10	E-ARAK-01076-01	Thrust socket	2		
11	5001-A08125030	Hex. socket screw	4	M8XP1.25X30L	
12	E-ARAK-01072-01	Front coupling cover	1		
13	E-ARAK-01005-01	Seal ring	1		
14	5001-A0812535	Hex. socket screw	6	M8XP1.25X35L	
15	E-ARAK-01004-01	Cover	1		
16		O ring	1	G-200	
17		Bearing	1	NN3024/W33	BG-146
18	E-ARAK-01006-01	Spacer	2		
19	E-ARAK-01017-01	Spacer	1		
20	E-ARAK-01018-01	Bearing	1	234424B	BG-147
21		Nut	1	YSR M120X2.0	
22	5001-A10150045	Hex. socket screw	6	M10XP1.5X45L	
23	E-ARAK-01002-01	Sleeve	1		
24	E-ARAK-01007-01	Spacer	1		
25		Bearing	1	NN3022/W33	BG-148
26	E-ARAK-00001-01	Head stock	1		
27	E-ARAK-01008-01	Rear coupling cover	1		
28	5001-A08125030	Hex. socket screw	6	M8XP1.25X30L	
29	5001-A06100020	Hex. socket screw	6	M6XP1.0X20L	
30	5001-A08125030	Hex. socket screw	6	M8XP1.25X30L	
31	E-ARAK-01009-01	Rear bearing cover	1		
32	E-ARAK-01010-01	Seal ring	1		
33	E-ARAK-01132-01	Pulley	1	6-Groove(Enlarge)	
34	E-ARAK-01012-01	Timing belt pulley	1		
35	E-ARAK-01013-01	Spacer	1		
36	E-ARAK-01131-01	Pulley	1	6-Groove(Enlarge)	
37		Nut	1	YSK M110X2.0	
38	5071-B00000016	Washer	6	M16	
39	5081-B00000016	Spring washer	6	M16	
40	5001-B16200060	Hex. socket screw	6	M16XP2.0X60L	
41	5001-A08125035	Hex. socket screw	2	M8XP1.25X35L	

Item	Part no.	Description	Q'ty	Remark	Milltronics #
42	E-ARAK-00002-01	Adjusting block	1		
43	5002-B10150055	Hex. bolt	2	M10XP1.5X55L	
44	5051-B00010150	Nut	2	M10	
45		Encoder (Fagor)	1	NE-1024-2MD	See #69
46	5001-B05080015	Hex. socket screw	4	M5XP0.8X15L	
47	5081-B00000005	Spring washer	4	M5	
48	5121-C05005017	Key (Fagor)	1	5X5X17	
49	E-ARAK-03031-01	Adjusting device for encoder	1		
50	5071-B00000008	washer	8	M8	
51	5081-B00000008	Spring washer	8	M8	
52	5001-B08125045	Hex. socket screw	8	M8XP1.25X45L	
53	5141-A00000025	C snap	1	STW-25	
54	5142-A00000047	C snap	1	RTW-47	
55	L-0401-00102	Bearing	2	6005Z	BG-06
56	E-ARAK-03004-01	Shaft	1		
57	5121-C05005020	Key	1	5X5X20L	
58	E-ARAK-03002-01	Encoder bracket	1		
59	L-0902-00002	Timing belt	1	HTD-5M-1050-15	BT-104
60	E-ARAK-03003-01	Timing belt pulley	1		
61	5087-A00000002	Washer	1	AW-02	MLA-99
62		Nut	1	AN-02	
63		Key (Milltronics)	1	5X5X17	
64	E-ARAK-03012-01	Shaft (Milltronics)	1		
65		Hex. Socket screw	3	M3XP0.5X14L	
66	E-ARAK-03011-01	Plate (Milltronics)	1		
67		Spring washer	4	M5	
68		Hex. socket screw	4	M5XP0.8X15L	
69		Encoder (Milltronics)	1		9595 (standard) 9653 (w/orient)
70		Key (Siemens)	1	5X5X17	
71	E-ARAK-03041-01	Shaft (Siemens)	1		
72	E-ARAK-03042-01	Plate (Siemens)	1		
73		Coupling (Siemens)	1		
74		Spring washer	4	M5	
75		Hex. socket screw	4	M5XP0.8X15L	
76		Encoder (Siemens)	1	FX2001-3GB02	
77		Spring washer	3	M3	
78		Hex. socket screw	3	M3XP0.5X14L	

5. Headstock Drawing D (D1-8, 4” bore)

Model	Drive belt #’s
ML16	BT-103 795 L12
ML18	BT-99 865 L12
ML22	BT-101 975 L12
ML22*	BT-116 990 L12
ML26	BT-95 1065 L12
*	*With 5:1 belt ratio*

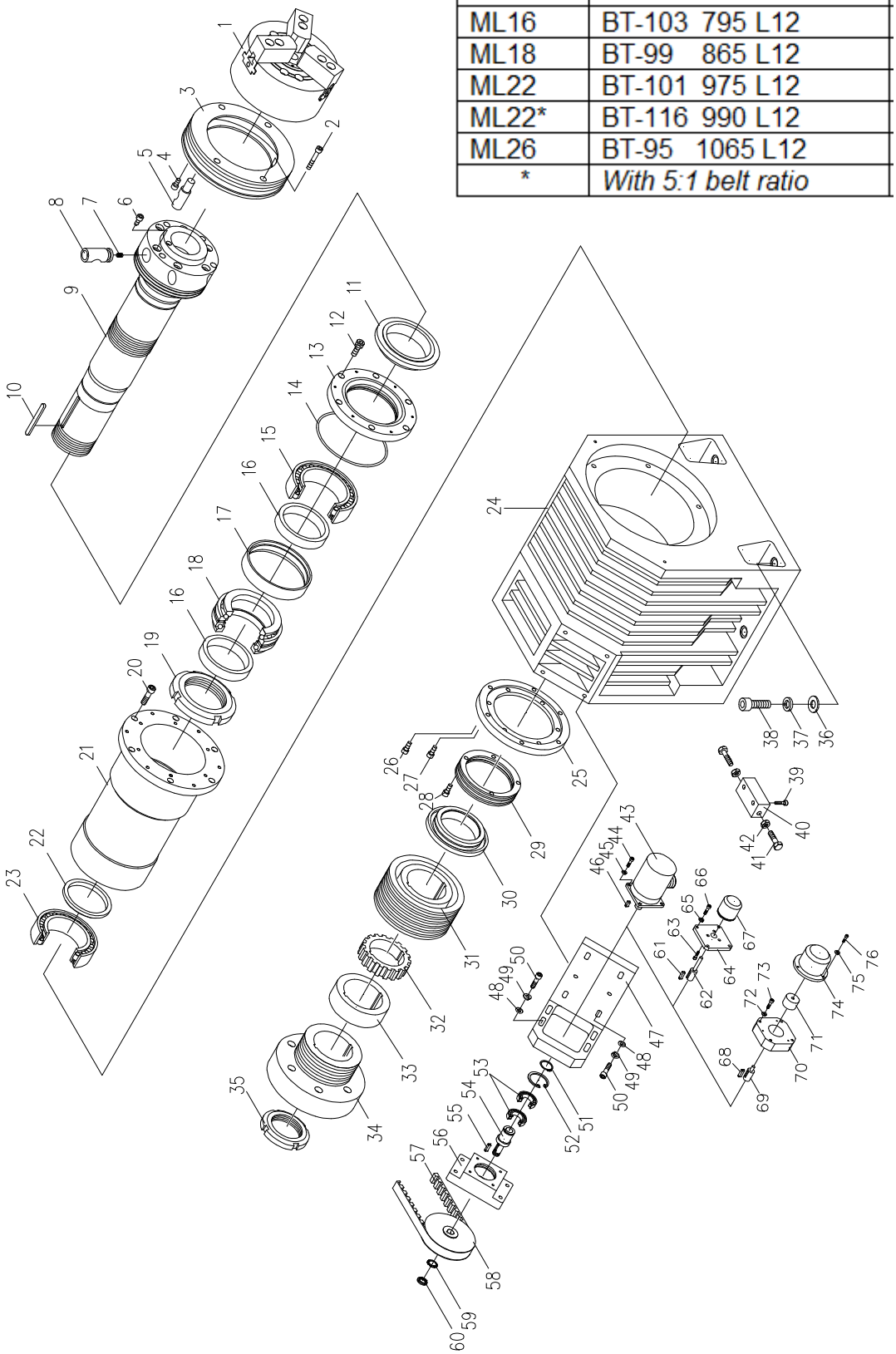

Headstock D (D1-8, 4” bore)

Item	Part no.	Description	Q'ty	Remark	Milltronics #
1		3-jaw chuck	1	SK-10 (option)	MPL-142
2	5001-A08125030	Hex. socket screw	6	M8 X P1.25 X 30L	
3	E-ARAK-01143-01	Front coupling cover	1		
4	5001-A08125016	Hex. socket screw	6	M8XP1.25X16L	
5	E-ARAK-01027-01	Studs	6		
6	E-ARAK-01147-01	Screw for cams	6		
7	E-ARAK-01029-01	Spring	6		
8	E-ARAK-01146-01	Cams	6		
9	E-ARAK-01141-01	Spindle	1	6-Groove	
10	5121-C16010160	Key (6-Groove)	2	16x10x160L	
11	E-ARAK-01145-01	Seal ring	1		MPL-566?
12	5001-A10150045	Hex. socket screw	6	M10XP1.5X45L	
13	E-ARAK-01144-01	Cover	1		
14		O ring	1	G-260	
15		Bearing	1	NN3032/W33	BG-178
16	E-ARAK-01036-01	Spacer	2		
17	E-ARAK-01047-01	Spacer	1		
18	E-ARAK-01048-01	Bearing	1	234432B	BG-179 or BG-187
19		Nut	1	YSR M160X3.0	
20	5001-A12175065	Hex. socket screw	6	M12XP1.75X65L	
21	E-ARAK-01032-01	Sleeve	1		
22	E-ARAK-01037-01	Spacer	1		
23		Bearing	1	NN3028/W33	BG-180
24	E-ARAK-00011-01	Head stock	1		
25	E-ARAK-01038-01	Rear coupling cover	1		
26	5001-A08125030	Hex. socket screw	6	M8XP1.25X30L	
27	5001-A06100020	Hex. socket screw	6	M6XP1.0X20L	
28	5001-A08125030	Hex. socket screw	6	M8XP1.25X30L	
29	E-ARAK-01039-01	Rear bearing cover	1		
30	E-ARAK-01040-01	Seal ring	1		
31	E-ARAK-01172-01	Pulley	1	6-Groove(Enlarge)	
32	E-ARAK-01042-01	Timing belt pulley	1		
33	E-ARAK-01043-01	Spacer	1		
34	E-ARAK-01171-01	Pulley	1	6-Groove(Enlarge)	
35		Nut	1	YSK M140X2.0	
36	5071-B00000016	Washer	6	M16	
37	5081-B00000016	Spring washer	6	M16	
38	5001-B16200060	Hex. socket screw	6	M16XP2.0X60L	
39	5001-A08125035	Hex. socket screw	2	M8XP1.25X35L	
40	E-ARAK-00002-01	Adjusting block	1		
41	5002-B10150055	Hex. bolt	2	M10XP1.5X55L	

Item	Part no.	Description	Q'ty	Remark	Milltronics #
42	5051-B00010150	Nut	2	M10	MPL-870
43		Encoder (Fagor)	1	NE-1024-2MD	
44	5001-B05080015	Hex. socket screw	4	M5XP0.8X15L	
45	5081-B00000005	Spring washer	4	M5	
46	5121-C05005017	Key (Fagor)	1	5X5X17	
47	E-ARAK-03031-01	Adjusting device for encoder	1		
48	5071-B00000008	washer	8	M8	
49	5081-B00000008	Spring washer	8	M8	
50	5001-B08125045	Hex. socket screw	8	M8XP1.25X45L	
51	5141-A00000025	C snap	1	STW-25	
52	5142-A00000047	C snap	1	RTW-47	MPL-798
53	L-0401-00102	Bearing	2	6005Z	BG-06
54	E-ARAK-03004-01	Shaft	1		
55	5121-C05005020	Key	1	5X5X20L	
56	E-ARAK-03002-01	Encoder bracket	1		
57	L-0902-00003	Timing belt	1	HTD-5M-1135-15	BT-154
58	E-ARAK-03023-01	Timing belt pulley	1		
59	5087-A00000002	Washer	1	AW-02	MLA-99
60		Nut	1	AN-02	
61		Key (Milltronics)	1	5X5X17	
62	E-ARAK-03012-01	Shaft (Milltronics)	1		
63		Hex. Socket screw	3	M3XP0.5X14L	
64	E-ARAK-03011-01	Plate (Milltronics)	1		
65		Spring washer	4	M5	
66		Hex. socket screw	4	M5XP0.8X15L	
67		Encoder (Milltronics)	1		9595 (standard) 9653 (w/orient)
68		Key (Siemens)	1	5X5X17	
69	E-ARAK-03041-01	Shaft (Siemens)	1		
70	E-ARAK-03042-01	Plate (Siemens)	1		
71		Coupling (Siemens)	1		
72		Spring washer	4	M5	
73		Hex. socket screw	4	M5XP0.8X15L	
74		Encoder (Siemens)	1	FX2001-3GB02	
75		Spring washer	3	M3	
76		Hex. socket screw	3	M3XP0.5X14L	

6. Headstock Drawing E (A1-11, 4” bore)

Model	Drive belt #’s
ML16	BT-103 795 L12
ML18	BT-99 865 L12
ML22	BT-101 975 L12
ML22*	BT-116 990 L12
ML26	BT-95 1065 L12
*	*With 5:1 belt ratio*

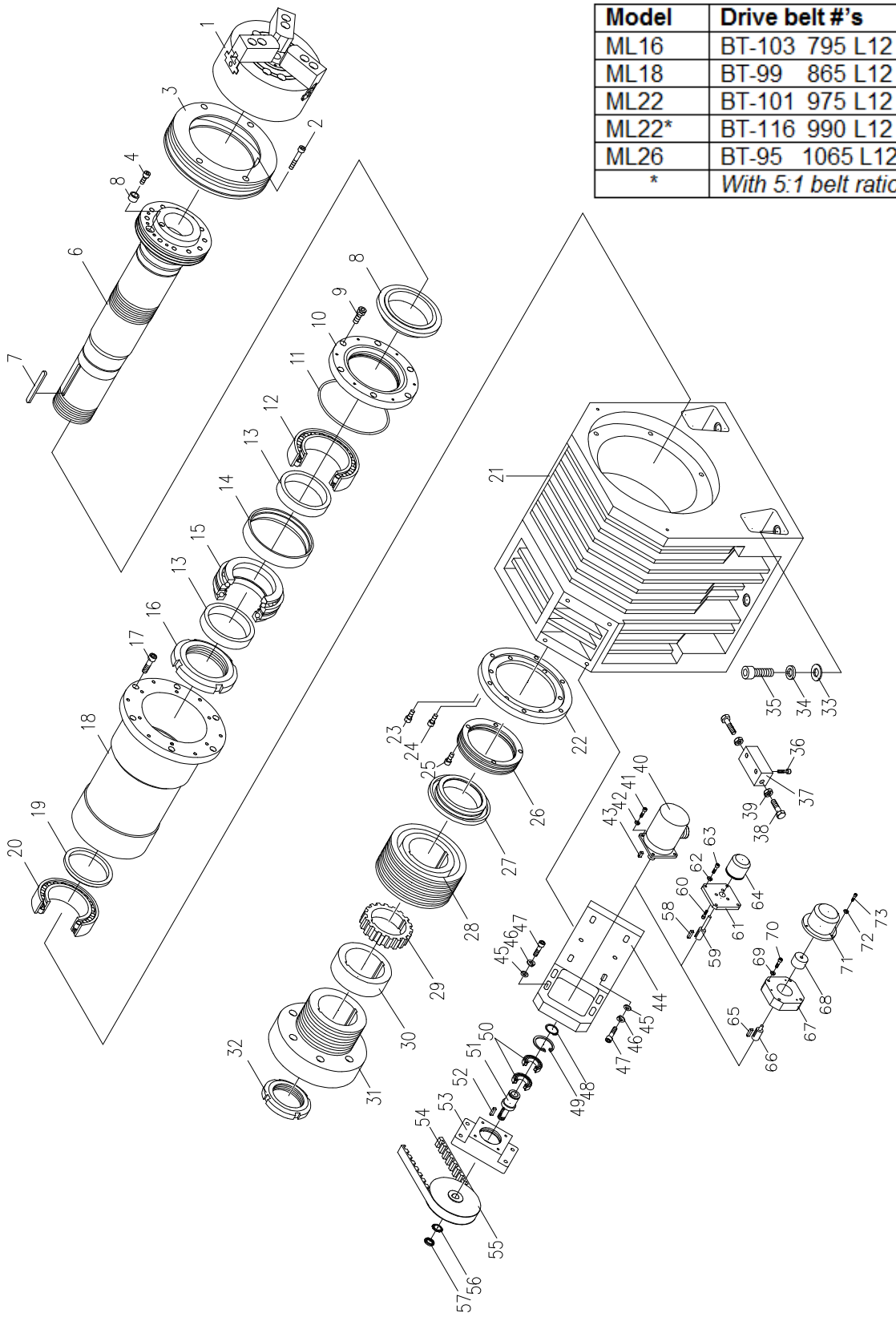

Headstock E (A1-11, 4” bore)

Item	Part no.	Description	Q'ty	Remark	Milltronics #
1		3-jaw chuck	1	SK-10 (option)	MPL-142
2	5001-A08125030	Hex. socket screw	6	M8 X P1.25 X 30L	
3	E-ARAK-01033-01	Front coupling cover	1		
4	5001-A10150025	Hex. socket screw	1	M10XP1.5X25L	
5	E-ARAK-01045-01	Drive key	1		
6	E-ARAK-01111-01	Spindle	1	6-Groove	
7	5121-C16010160	Key (6-Groove)	2	16x10x160L	
8	E-ARAK-01035-01	Seal ring	1		
9	5001-A10150045	Hex. socket screw	6	M10XP1.5X45L	
10	E-ARAK-01034-01	Cover	1		
11		O ring	1	G-260	
12		Bearing	1	NN3032/W33	BG-178
13	E-ARAK-01036-01	Spacer	2		
14	E-ARAK-01047-01	Spacer	1		
15	E-ARAK-01048-01	Bearing	1	234432B	BG-179 or BG-187
16		Nut	1	YSR M160X3.0	
17	5001-A12175065	Hex. socket screw	6	M12XP1.75X65L	
18	E-ARAK-01032-01	Sleeve	1		
19	E-ARAK-01037-01	Spacer	1		
20		Bearing	1	NN3028/W33	BG-180
21	E-ARAK-00011-01	Head stock	1		
22	E-ARAK-01038-01	Rear coupling cover	1		
23	5001-A08125030	Hex. socket screw	6	M8XP1.25X30L	
24	5001-A06100020	Hex. socket screw	6	M6XP1.0X20L	
25	5001-A08125030	Hex. socket screw	6	M8XP1.25X30L	
26	E-ARAK-01039-01	Rear bearing cover	1		
27	E-ARAK-01040-01	Seal ring	1		
28	E-ARAK-01172-01	Pulley	1	6-Groove(Enlarge)	
29	E-ARAK-01042-01	Timing belt pulley	1		
30	E-ARAK-01043-01	Spacer	1		
31	E-ARAK-01171-01	Pulley	1	6-Groove(Enlarge)	
32		Nut	1	YSK M140X2.0	
33	5071-B00000016	Washer	6	M16	
34	5081-B00000016	Spring washer	6	M16	
35	5001-B16200060	Hex. socket screw	6	M16XP2.0X60L	
36	5001-A08125035	Hex. socket screw	2	M8XP1.25X35L	
37	E-ARAK-00002-01	Adjusting block	1		
38	5002-B10150055	Hex. bolt	2	M10XP1.5X55L	
39	5051-B00010150	Nut	2	M10	
40		Encoder (Fagor)	1	NE-1024-2MD	
41	5001-B05080015	Hex. socket screw	4	M5XP0.8X15L	

Item	Part no.	Description	Q'ty	Remark	Milltronics #
42	5081-B00000005	Spring washer	4	M5	
43	5121-C05005017	Key (Fagor)	1	5X5X17	
44	E-ARAK-03031-01	Adjusting device for encoder	1		
45	5071-B00000008	washer	8	M8	
46	5081-B00000008	Spring washer	8	M8	
47	5001-B08125045	Hex. socket screw	8	M8XP1.25X45L	
48	5141-A00000025	C snap	1	STW-25	
49	5142-A00000047	C snap	1	RTW-47	MPL-798
50	L-0401-00102	Bearing	2	6005Z	BG-06
51	E-ARAK-03004-01	Shaft	1		
52	5121-C05005020	Key	1	5X5X20L	
53	E-ARAK-03002-01	Encoder bracket	1		
54	L-0902-00003	Timing belt	1	HTD-5M-1135-15	BT-154
55	E-ARAK-03023-01	Timing belt pulley	1		
56	5087-A00000002	Washer	1	AW-02	MLA-99
57		Nut	1	AN-02	
58		Key (Milltronics)	1	5X5X17	
59	E-ARAK-03012-01	Shaft (Milltronics)	1		
60		Hex. Socket screw	3	M3XP0.5X14L	
61	E-ARAK-03011-01	Plate (Milltronics)	1		
62		Spring washer	4	M5	
63		Hex. socket screw	4	M5XP0.8X15L	
64		Encoder (Milltronics)	1		9595 (standard) 9653 (w/orient)
65		Key (Siemens)	1	5X5X17	
66	E-ARAK-03041-01	Shaft (Siemens)	1		
67	E-ARAK-03042-01	Plate (Siemens)	1		
68		Coupling (Siemens)	1		
69		Spring washer	4	M5	
70		Hex. socket screw	4	M5XP0.8X15L	
71		Encoder (Siemens)	1	FX2001-3GB02	
72		Spring washer	3	M3	
73		Hex. socket screw	3	M3XP0.5X14L	

7. Headstock Drawing F (A2-11, 6” bore-only for ML26)

Model	Drive belt #’s
ML16	BT-103 795 L12
ML18	BT-99 865 L12
ML22	BT-101 975 L12
ML22*	BT-116 990 L12
ML26	BT-95 1065 L12
*	*With 5:1 belt ratio*

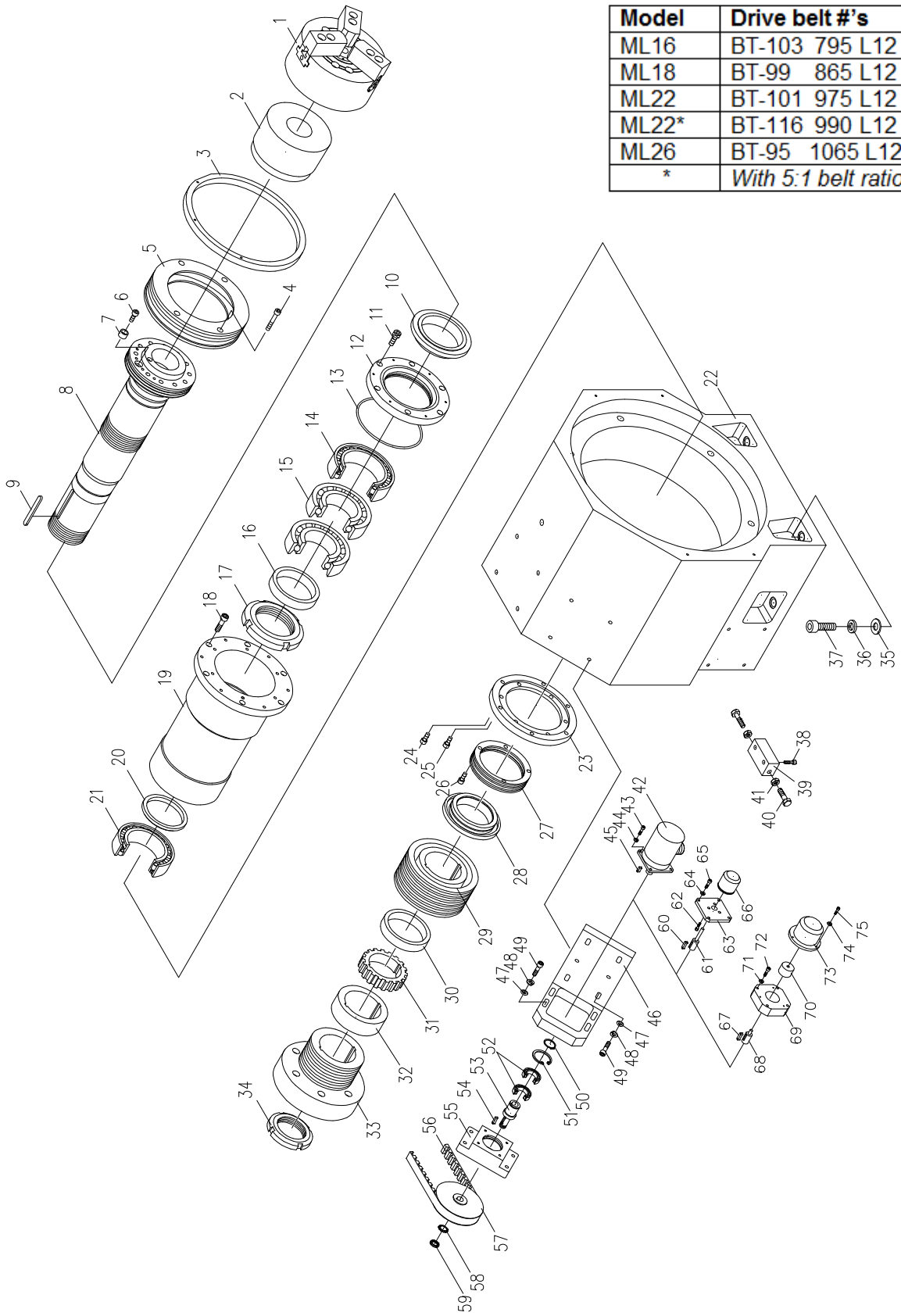

Headstock F (A2-11, 6” bore-only for ML26)

Item	Part no.	Description	Q'ty	Remark	Milltronics #
1		3-jaw chuck	1	SK-16 (option)	MPL-126
2	E-ARAQ-01011-01	Sleeve	1		
3	E-ARAK-70096-01	Fixing ring	1		
4	5001-A08125035	Hex. socket screw	4	M8 X P1.25 X 35L	
5	E-ARAM-01203-01	Front coupling cover	1		
6	5001-A10150025	Hex. socket screw	1	M10XP1.5X25L	
7	E-ARAK-01045-01	Drive key	1		
8	E-ARAM-01201-01	Spindle	1	6-Groove	MPL0574
9	5121-C22014200	Key	2	22X14X200L	
	5121-C22010200	Key	2	22x10x200L(For MILL)	
10	E-ARAM-01205-01	Seal ring	1		
11	5001-A10150045	Hex. socket screw	6	M10XP1.5X45L	
12	E-ARAM-01204-01	Cover	1		
13		O ring	1	5x1068l	
14	E-ARAM-01217-01	Bearing	1	NN3044/W33	BG-196
15	E-ARAM-01216-01	Bearing	1	220BADB	---
16	E-ARAM-01206-01	Spacer	1		
17		Nut	1	YSR M220X3.0	
18	5001-A12175065	Hex. socket screw	6	M16XP2.0X45L	
19	E-ARAM-01202-01	Sleeve	1		
20	E-ARA,M-01207-01	Spacer	1		
21	E-ARAM-01215-01	Bearing	1	NN3040/W33	BG-197
22	E-ARAM-00011-01	Head stock	1		
23	E-ARAM-01208-01	Rear coupling cover	1		
24	5001-A10150040	Hex. socket screw	6	M10XP1.5X40L	
25	5001-A08125025	Hex. socket screw	6	M8XP1.25X25L	
26	5001-A08125040	Hex. socket screw	6	M8XP1.25X40L	
27	E-ARAM-01209-01	Rear bearing cover	1		
28	E-ARAM-01210-01	Seal ring	1		
29	E-ARAM-01211-01	Pulley (6 Groove-Enlarge)	1		
	E-ARAM-01251-01	Pulley (6 Groove-Enlarge)	1	(For MILL)	
30	E-ARAM-01218-01	Spacer	1	(For MILL)	
31	E-ARAM-01212-01	Timing belt pulley	1		
32	E-ARAM-01213-01	Spacer	1		
33	E-ARAM-01214-01	Pulley (4 Groove-Enlarge)	1		
34		Nut	1	YSK M200X3.0	
35	5071-B00000016	Washer	6	M16	
36	5081-B00000016	Spring washer	6	M16	
37	5001-B16200060	Hex. socket screw	6	M16XP2.0X60L	
38	5001-A08125035	Hex. socket screw	2	M8XP1.25X35L	

Item	Part no.	Description	Q'ty	Remark	Milltronics #
39	E-ARAK-00002-01	Adjusting block	1		
40	5002-B10150055	Hex. bolt	2	M10XP1.5X55L	
41	5051-B00010150	Nut	2	M10	MPL-870
42		Encoder (Fagor)	1	NE-1024-2MD	
43	5001-B05080015	Hex. socket screw	4	M5XP0.8X15L	
44	5081-B00000005	Spring washer	4	M5	
45	5121-C05005017	Key (Fagor)	1	5X5X17	
46	E-ARAK-03001-01	Adjusting device for encoder	1		
47	5071-B00000008	washer	8	M8	
48	5081-B00000008	Spring washer	8	M8	
49	5001-B08125045	Hex. socket screw	8	M8XP1.25X45L	
50	5141-A00000025	C snap	1	STW-25	
51	5142-A00000047	C snap	1	RTW-47	
52	L-0401-00102	Bearing	2	6005Z	BG-06
53	E-ARAK-03004-01	Shaft	1		
54	5121-C05005020	Key	1	5X5X20L	
55	E-ARAK-03002-01	Encoder bracket	1		
56	L-0902-00006	Timing belt	1	HTD-5M-1520-15	BT-155
57	E-ARAK-03051-01	Timing belt pulley	1		
58	5087-A00000002	Washer	1	AW-02	MLA-99
59		Nut	1	AN-02	
60		Key (Milltronics)	1	5X5X17	
61	E-ARAK-03012-01	Shaft (Milltronics)	1		
62		Hex. Socket screw	3	M3XP0.5X14L	
63	E-ARAK-03011-01	Plate (Milltronics)	1		
64		Spring washer	4	M5	
65		Hex. socket screw	4	M5XP0.8X15L	
66		Encoder (Milltronics)	1	C-Axis	EO-42
67		Key (Siemens)	1	5X5X17	
68	E-ARAK-03041-01	Shaft (Siemens)	1		
69	E-ARAK-03042-01	Plate (Siemens)	1		
70		Coupling (Siemens)	1		
71		Spring washer	4	M5	
72		Hex. socket screw	4	M5XP0.8X15L	
73		Encoder (Siemens)	1	FX2001-3GB02	
74		Spring washer	3	M3	
75		Hex. socket screw	3	M3XP0.5X14L	

8. C-Axis (Headstock A1-8, D1-8, DIN55027, 3” bore)

Model	Drive belt #’s
ML16	BT-103 795 L12
ML18	BT-99 865 L12
ML22	BT-101 975 L12
ML22*	BT-116 990 L12
ML26	BT-95 1065 L12
*	*With 5:1 belt ratio*

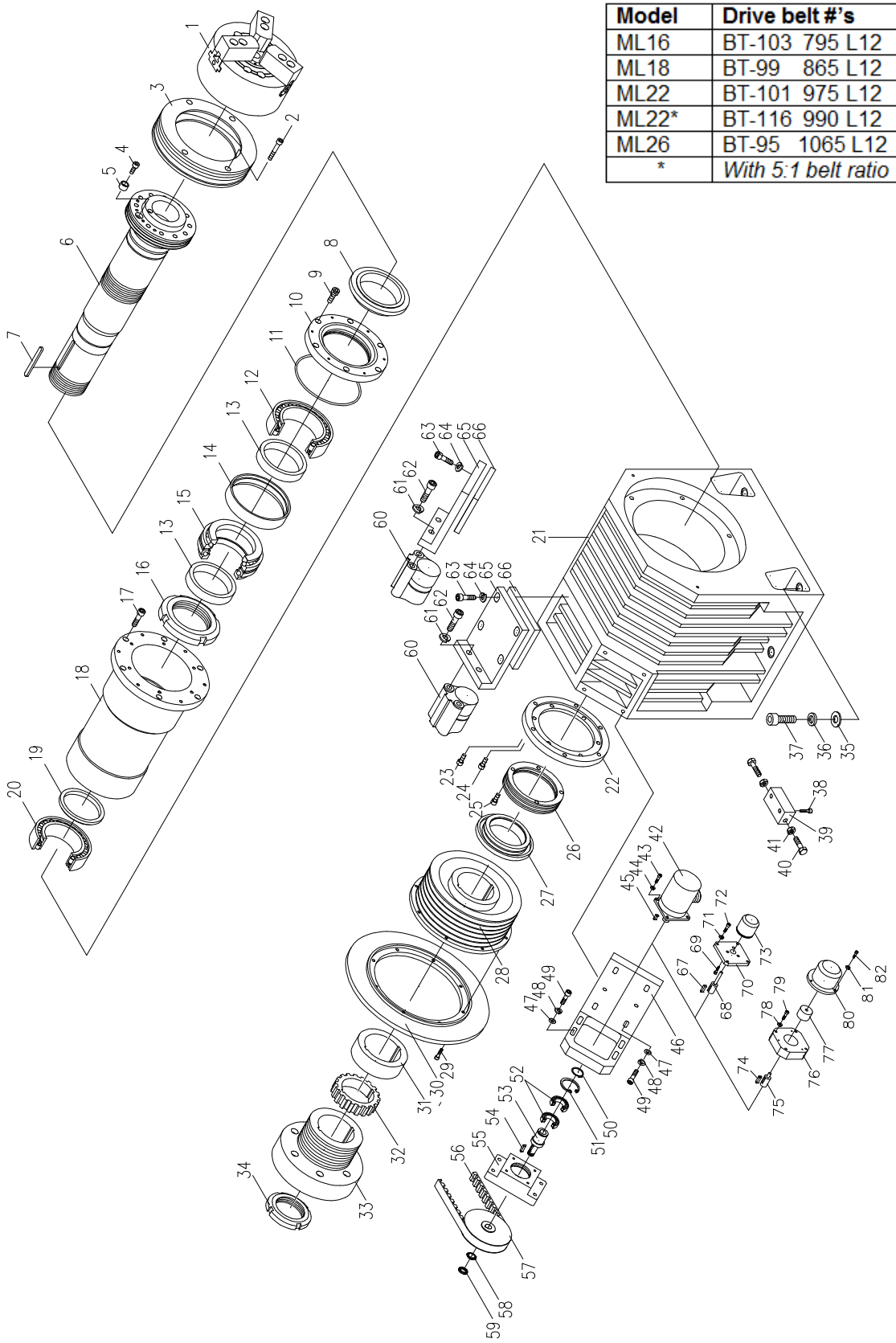

C-Axis (Headstock A1-8, D1-8, DIN55207, 3” bore)

Item	Part no.	Description	Q'ty	Remark	Milltronics #
1		3-jaw chuck	1	SK-10 (option)	MPL-142
2	5001-A08125030	Hex. socket screw	4	M8 X P1.25 X 30L	
3	E-ARAK-01003-01	Front coupling cover	1		
4	5001-A10150020	Hex. socket screw	2	M10XP1.5X20L	
5	E-ARAK-01015-01	Drive key	1		
6	E-ARAK-01061-01	Spindle (A1-8)	1	6-Groove	
	E-ARAK-01121-01	Spindle (D1-8)	1	6-Groove	
	E-ARAK-01131-01	Spindle (DIN55207)	1	6-Groove	
7	5121-C12008160	Key (6-Groove)	2	12x8x160L	
8	E-ARAK-01005-01	Seal ring	1		
9	5001-A0812535	Hex. socket screw	6	M8XP1.25X35L	
10	E-ARAK-01004-01	Cover	1		
11		O ring	1	G-200	
12		Bearing	1	NN3024K/W33	BG-146
13	E-ARAK-01006-01	Spacer	2		
14	E-ARAK-01017-01	Spacer	1		
15	E-ARAK-01018-01	Bearing	1	234424B	BG-147
16		Nut	1	YSR M120X2.0	
17	5001-A10150045	Hex. socket screw	6	M10XP1.5X45L	
18	E-ARAK-01002-01	Sleeve	1		
19	E-ARAK-01007-01	Spacer	1		
20		Bearing	1	NN3022K/W33	---
21	E-ARAK-00001-01	Head stock	1		
22	E-ARAK-01008-01	Rear coupling cover	1		
23	5001-A08125030	Hex. socket screw	6	M8XP1.25X30L	
24	5001-A06100020	Hex. socket screw	6	M6XP1.0X20L	
25	5001-A08125030	Hex. socket screw	6	M8XP1.25X30L	
26	E-ARAK-01009-01	Rear bearing cover	1		
27	E-ARAK-01010-01	Seal ring	1		
28	E-ARAK-01062-01	Pulley	1	6-Groove	
	E-ARAK-01132-01	Pulley	1	6-Groove(Enlarge)	
29	5001-B06100015	Hex. socket screw	8	M6XP1.0X15L	
30	E-ARAK-55031-01	Disc	1	6-Groove	
31	E-ARAK-01013-01	Spacer	1		
32	E-ARAK-01012-01	Timing belt pulley	1		
33	E-ARAK-01014-01	Pulley	1	6-Groove	
	E-ARAK-01131-01	Pulley	1	6-Groove(Enlarge)	
34		Nut	1	YSK M110X2.0	
35	5071-B00000016	Washer	6	M16	
36	5081-B00000016	Spring washer	6	M16	
37	5001-B16200060	Hex. socket screw	6	M16XP2.0X60L	
38	5001-A08125035	Hex. socket screw	2	M8XP1.25X35L	
39	E-ARAK-00002-01	Adjusting block	1		
40	5002-B10150055	Hex. bolt	2	M10XP1.5X55L	
41	5051-B00010150	Nut	2	M10	
42		Encoder (Fanuc)	1		
43	5001-B05080015	Hex. socket screw	4	M5XP0.8X15L	
44	5081-B00000005	Spring washer	4	M5	

Item	Part no.	Description	Q'ty	Remark	Milltronics #
45	5121-C05005017	Key (Fanuc)	1	5X5X17	
46	E-ARAK-03031-01	Adjusting device for encoder	1		
47	5071-B00000008	washer	8	M8	
48	5081-B00000008	Spring washer	8	M8	
49	5001-B08125045	Hex. socket screw	8	M8XP1.25X45L	
50	5141-A00000025	C snap	1	STW-25	
51	5142-A00000047	C snap	1	RTW-47	
52	L-0401-00102	Bearing	2	6005Z	BG-06
53	E-ARAK-55005-01	Shaft	1		
54	5121-C05005020	Key	1	5X5X20L	
55	E-ARAK-03002-01	Encoder bracket	1		
56	L-0902-00002	Timing belt	1	HTD-5M-1050-15	BT-104
57	E-ARAK-03003-01	Timing belt pulley	1		
58	5087-A00000002	Washer	1	AW-02	MLA-99
59		Nut		AN-02	
60	E-ARAK-55008-01	Disc brakes	2		
61	5081-B00000012	Spring washer	4	M12	
62	5001-B12175040	Hex. socket screw	4	M12XP1.75X40L	
63	5001-B10150035	Hex. socket screw	8	M10XP1.5X35L	
64	5081-B00000010	Spring washer	8	M10	
65	E-ARAK-55006-01	Bracket	2		
66	E-ARAK-55033-01	Spacer	2		
67		Key (Milltronics)	1	5X5X17	
68	E-ARAK-03012-01	Shaft (Milltronics)	1		
69		Hex. Socket screw	3	M3XP0.5X14L	
70	E-ARAK-03011-01	Plate (Milltronics)	1		
71		Spring washer	4	M5	
72		Hex. socket screw	4	M5XP0.8X15L	
73		Encoder (Milltronics)	1	C-Axis	EO-42
74		Key (Fagor/Siemens)	1	5X5X17	
75	E-ARAK-03041-01	Shaft (Fagor/Siemens)	1		
76	E-ARAK-03042-01	Plate (Fagor/Siemens)	1		
77		Coupling (Fagor/Siemens)	1		
78		Spring washer	4	M5	
79		Hex. socket screw	4	M5XP0.8X15L	
80		Encoder (Fagor)	1	NE-1024-2MD	
		Encoder (Siemens)	1	FX2001-3GB02	
81		Spring washer	3	M3	
82		Hex. socket screw	3	M3XP0.5X14L	

9. C-Axis (Headstock A1-11, D1-8, 4” bore)

Model	Drive belt #’s
ML16	BT-103 795 L12
ML18	BT-99 865 L12
ML22	BT-101 975 L12
ML22*	BT-116 990 L12
ML26	BT-95 1065 L12
*	*With 5:1 belt ratio*

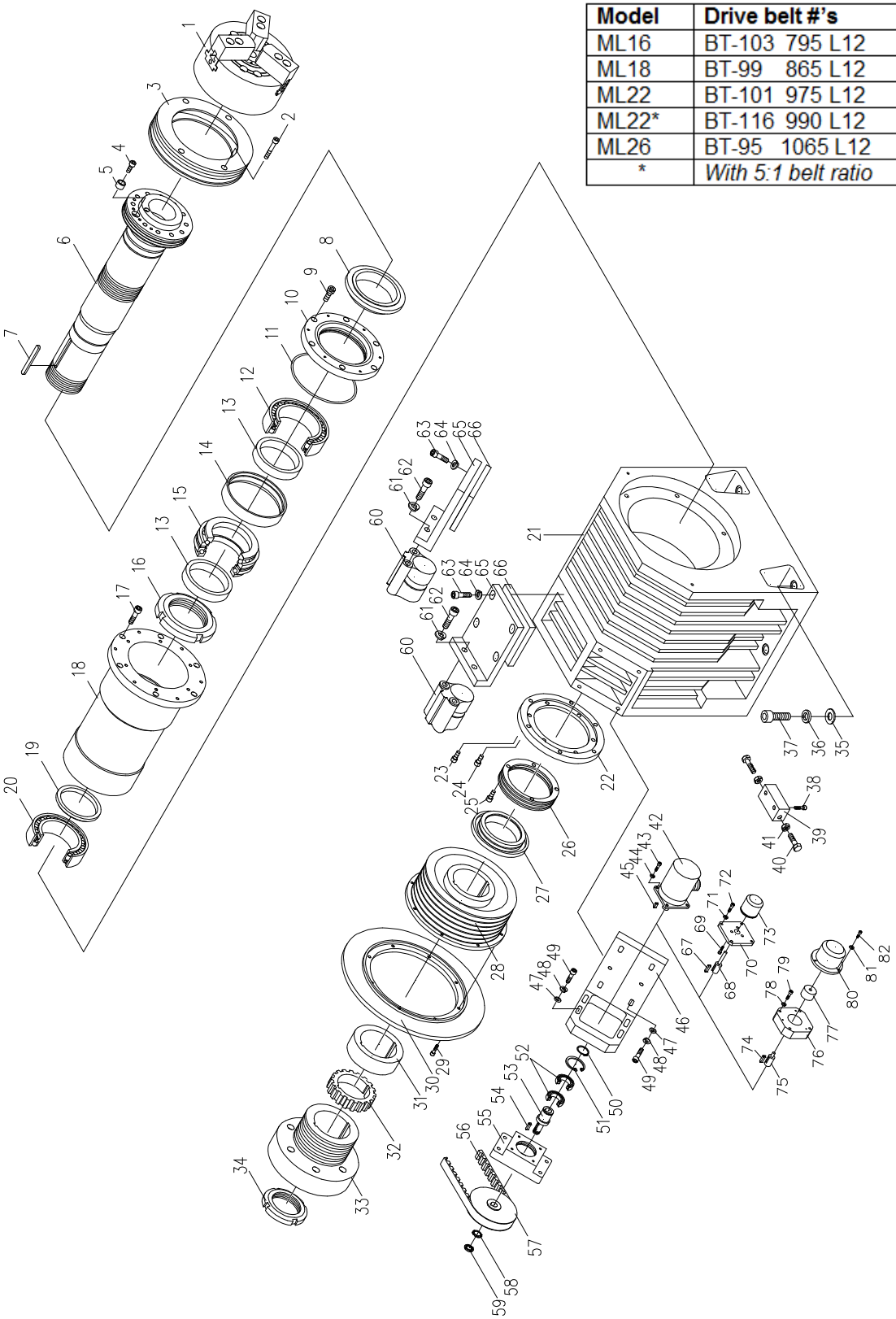

C-Axis (Headstock A1-11, D1-8, 4” bore)

Item	Part no.	Description	Q'ty	Remark	Milltronics #
1		3-jaw chuck	1	SK-10 (option)	MPL-142
2	5001-A08125030	Hex. socket screw	6	M8 X P1.25 X 30L	
3	E-ARAK-01033-01	Front coupling cover	1		
4	5001-A10150025	Hex. socket screw	2	M10XP1.5X25L	
5	E-ARAK-01045-01	Drive key	1		
6	E-ARAK-01111-01	Spindle (A1-11)	1	6-Groove	
	E-ARAK-01141-01	Spindle (D1-8)	1	6-Groove	
7	5121-C16010160	Key (6-Groove)	2	16x10x160L	
8	E-ARAK-01035-01	Seal ring	1		
9	5001-A10150045	Hex. socket screw	6	M10XP1.5X45L	
10	E-ARAK-01034-01	Cover	1		
11		O ring	1	G-260	
12		Bearing	1	NN3032K/W33	BG-185
13	E-ARAK-01036-01	Spacer	2		
14	E-ARAK-01047-01	Spacer	1		
15	E-ARAK-01048-01	Bearing	1	234432B	BG-179 or BG-187
16		Nut	1	YSR M160X3.0	
17	5001-A12175065	Hex. socket screw	6	M2XP1.75X65L	
18	E-ARAK-01032-01	Sleeve	1		
19	E-ARAK-01037-01	Spacer	1		
20		Bearing	1	NN3028K/W33	BG-186
21	E-ARAK-00011-01	Head stock	1		
22	E-ARAK-01038-01	Rear coupling cover	1		
23	5001-A08125030	Hex. socket screw	6	M8XP1.25X30L	
24	5001-A06100020	Hex. socket screw	6	M6XP1.0X20L	
25	5001-A08125030	Hex. socket screw	6	M8XP1.25X30L	
26	E-ARAK-01039-01	Rear bearing cover	1		
27	E-ARAK-01040-01	Seal ring	1		
28	E-ARAK-01172-01	Pulley	1	6-Groove(Enlarge)	
29	5001-B06100015	Hex. socket screw	8	M6XP1.0X15L	
30	E-ARAK-55031-01	Disc	1	6-Groove	
31	E-ARAK-01043-01	Spacer	1		
32	E-ARAK-01042-01	Timing belt pulley	1		
33	E-ARAK-01171-01	Pulley	1	6-Groove(Enlarge)	
34		Nut	1	YSK M140X2.0	
35	5071-B00000016	Washer	6	M16	
36	5081-B00000016	Spring washer	6	M16	
37	5001-B16200060	Hex. socket screw	6	M16XP2.0X60L	
38	5001-A08125035	Hex. socket screw	2	M8XP1.25X35L	
39	E-ARAK-00002-01	Adjusting block	1		
40	5002-B10150055	Hex. bolt	2	M10XP1.5X55L	
41	5051-B00010150	Nut	2	M10	
42		Encoder (Fanuc)	1		

Item	Part no.	Description	Q'ty	Remark	Milltronics #
43	5001-B05080015	Hex. socket screw	4	M5XP0.8X15L	
44	5081-B00000005	Spring washer	4	M5	
45	5121-C05005017	Key (Fanuc)	1	5X5X17	
46	E-ARAK-03031-01	Adjusting device for encoder	1		
47	5071-B00000008	washer	8	M8	
48	5081-B00000008	Spring washer	8	M8	
49	5001-B08125045	Hex. socket screw	8	M8XP1.25X45L	
50	5141-A00000025	C snap	1	STW-25	
51	5142-A00000047	C snap	1	RTW-47	
52	L-0401-00102	Bearing	2	6005Z	BG-06
53	E-ARAK-55005-01	Shaft	1		
54	5121-C05005020	Key	1	5X5X20L	
55	E-ARAK-03002-01	Encoder bracket	1		
56	L-0902-00003	Timing belt	1	HTD-5M-1135-15	BT-154
57	E-ARAK-03023-01	Timing belt pulley	1		
58	5087-A00000002	Washer	1	AW-02	MLA-99
59		Nut		AN-02	
60	E-ARAK-55008-01	Disc brakes	2		
61	5081-B00000012	Spring washer	4	M12	
62	5001-B12175040	Hex. socket screw	4	M12XP1.75X40L	
63	5001-B10150035	Hex. socket screw	8	M10XP1.5X35L	
64	5081-B00000010	Spring washer	8	M10	
65	E-ARAK-55006-01	Bracket	2		
66	E-ARAK-55035-01	Spacer	2		
67		Key (Milltronics)	1	5X5X17	
68	E-ARAK-03012-01	Shaft (Milltronics)	1		
69		Hex. Socket screw	3	M3XP0.5X14L	
70	E-ARAK-03011-01	Plate (Milltronics)	1		
71		Spring washer	4	M5	
72		Hex. socket screw	4	M5XP0.8X15L	
73		Encoder (Milltronics)	1	C-Axis	EO-42
74		Key (Fagor/Siemens)	1	5X5X17	
75	E-ARAK-03041-01	Shaft (Fagor/Siemens)	1		
76	E-ARAK-03042-01	Plate (Fagor/Siemens)	1		
77		Coupling (Fagor/Siemens)	1		
78		Spring washer	4	M5	
79		Hex. socket screw	4	M5XP0.8X15L	
80		Encoder (Fagor)	1	NE-1024-2MD	
		Encoder (Siemens)	1	FX2001-3GB02	
81		Spring washer	3	M3	
82		Hex. socket screw	3	M3XP0.5X14L	

10. C-Axis (Headstock A2-11, 6” bore-only for ML26)

Model	Drive belt #’s
ML16	BT-103 795 L12
ML18	BT-99 865 L12
ML22	BT-101 975 L12
ML22*	BT-116 990 L12
ML26	BT-95 1065 L12
*	*With 5:1 belt ratio*

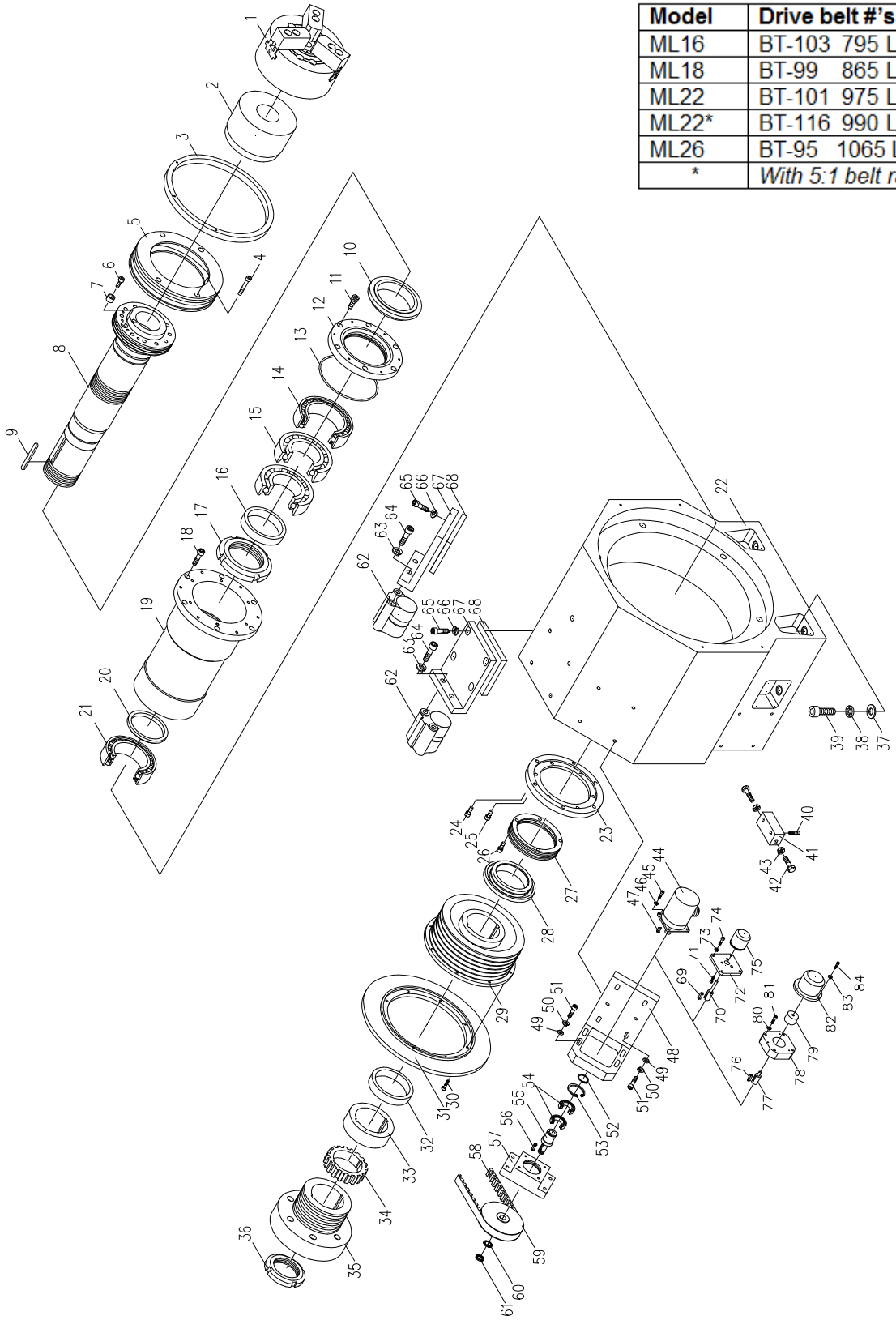

C-Axis (Headstock A2-11, 6” bore-only for ML26)

Item	Part no.	Description	Q'ty	Remark	Milltronics #
1		3-jaw chuck	1	SK-16 (option)	MPL-126
2	E-ARAQ-01011-01	Sleeve	1		
3	E-ARAK-70096-01	Fixing ring	1		
4	5001-A08125035	Hex. socket screw	4	M8 X P1.25 X 35L	
5	E-ARAM-01203-01	Front coupling cover	1		
6	5001-A10150025	Hex. socket screw	1	M10XP1.5X25L	
7	E-ARAK-01045-01	Drive key	1		
8	E-ARAM-01201-01	Spindle	1	6-Groove	MPL0574
9	5121-C22014200	Key	2	22X10X200L	
	5121-C22010200	Key	2	22x10x200L(For MILL)	
10	E-ARAM-01205-01	Seal ring	1		
11	5001-A10150045	Hex. socket screw	6	M10XP1.5X45L	
12	E-ARAM-01204-01	Cover	1		
13		O ring	1	5x1068l	
14	E-ARAM-01217-01	Bearing	1	NN3044/W33	BG-196
15	E-ARAM-01216-01	Bearing	1	220BADB	---
16	E-ARAM-01206-01	Spacer	1		
17		Nut	1	YSR M220X3.0	
18	5001-A12175065	Hex. socket screw	6	M16XP2.0X45L	
19	E-ARAM-01202-01	Sleeve	1		
20	E-ARA,M-01207-01	Spacer	1		
21	E-ARAM-01215-01	Bearing	1	NN3040/W33	BG-197
22	E-ARAM-00011-01	Head stock	1		
23	E-ARAM-01208-01	Rear coupling cover	1		
24	5001-A10150040	Hex. socket screw	6	M10XP1.5X40L	
25	5001-A08125025	Hex. socket screw	6	M8XP1.25X25L	
26	5001-A08125040	Hex. socket screw	6	M8XP1.25X40L	
27	E-ARAM-01209-01	Rear bearing cover	1		
28	E-ARAM-01210-01	Seal ring	1		
29	E-ARAM-01211-01	Pulley (6 Groove-Enlarge)	1		
	E-ARAM-01251-01	Pulley (6 Groove-Enlarge)	1	(For MILL)	
30	5001-B06100014	Hex. socket screw	8	M6XP1.0X14L	
		Hex. socket screw	8	W3/8"-1"L(For MILL)	
31	E-ARAK-55031-01	Disc	1		
	E-ARAK-55052-01	Disc	1	(For MILL)	
32	E-ARAM-01218-01	Spacer	1	(For MILL)	
33	E-ARAM-01213-01	Spacer	1		
34	E-ARAM-01212-01	Timing belt pulley	1		
35	E-ARAM-01214-01	Pulley (4 Groove-Enlarge)	1		
36		Nut	1	YSK M200X3.0	
37	5071-B00000016	Washer	6	M16	
38	5081-B00000016	Spring washer	6	M16	
39	5001-B16200060	Hex. socket screw	6	M16XP2.0X60L	
40	5001-A08125035	Hex. socket screw	2	M8XP1.25X35L	
41	E-ARAK-00002-01	Adjusting block	1		
42	5002-B10150055	Hex. bolt	2	M10XP1.5X55L	
43	5051-B00010150	Nut	2	M10	

Item	Part no.	Description	Q'ty	Remark	Milltronics #
44		Encoder (Fanuc)	1		
45	5001-B05080015	Hex. socket screw	4	M5XP0.8X15L	
46	5081-B00000005	Spring washer	4	M5	
47	5121-C05005017	Key (Fanuc)	1	5X5X17	
48	E-ARAK-03031-01	Adjusting device for encoder	1		
49	5071-B00000008	washer	8	M8	
50	5081-B00000008	Spring washer	8	M8	
51	5001-B08125045	Hex. socket screw	8	M8XP1.25X45L	
52	5141-A00000025	C snap	1	STW-25	
53	5142-A00000047	C snap	1	RTW-47	
54	L-0401-00102	Bearing	2	6005Z	BG-06
55	E-ARAK-55005-01	Shaft	1		
56	5121-C05005020	Key	1	5X5X20L	
57	E-ARAK-03002-01	Encoder bracket	1		
58	L-0902-00006	Timing belt	1	HTD-5M-1520-15	BT-155
59	E-ARAK-03051-01	Timing belt pulley	1		
60	5087-A00000002	Washer	1	AW-02	MLA-99
61		Nut		AN-02	
62	E-ARAK-55008-01	Disc brakes	2		
63	5081-B00000012	Spring washer	4	M12	
64	5001-B12175040	Hex. socket screw	4	M12XP1.75X40L	
65	5001-B10150035	Hex. socket screw	8	M10XP1.5X35L	
66	5081-B00000010	Spring washer	8	M10	
67	E-ARAK-55006-01	Bracket	2		
68	E-ARAK-55033-01	Spacer	2	(For MILL)	
69		Key (Milltronics)	1	5X5X17	
70	E-ARAK-03012-01	Shaft (Milltronics)	1		
71		Hex. Socket screw	3	M3XP0.5X14L	
72	E-ARAK-03011-01	Plate (Milltronics)	1		
73		Spring washer	4	M5	
74		Hex. socket screw	4	M5XP0.8X15L	
75		Encoder (Milltronics)	1	C-Axis	EO-42
76		Key (Fagor/Siemens)	1	5X5X17	
77	E-ARAK-03041-01	Shaft (Fagor/Siemens)	1		
78	E-ARAK-03042-01	Plate (Fagor/Siemens)	1		
79		Coupling (Fagor/Siemens)	1		
80		Spring washer	4	M5	
81		Hex. socket screw	4	M5XP0.8X15L	
82		Encoder (Fagor)	1	NE-1024-2MD	
		Encoder (Siemens)	1	FX2001-3GB02	
83		Spring washer	3	M3	
84		Hex. socket screw	3	M3XP0.5X14L	

11. Speed Change Transmission (if equipped, Select* Models only)

*** Models factory equipped with 2-speed transmissions include:**

- ML18 Series A&B
- ML22 Series A&B
- ML26 Series A

All other ML16,18, 22, and 26 models are belted directly between the spindle and spindle motor.

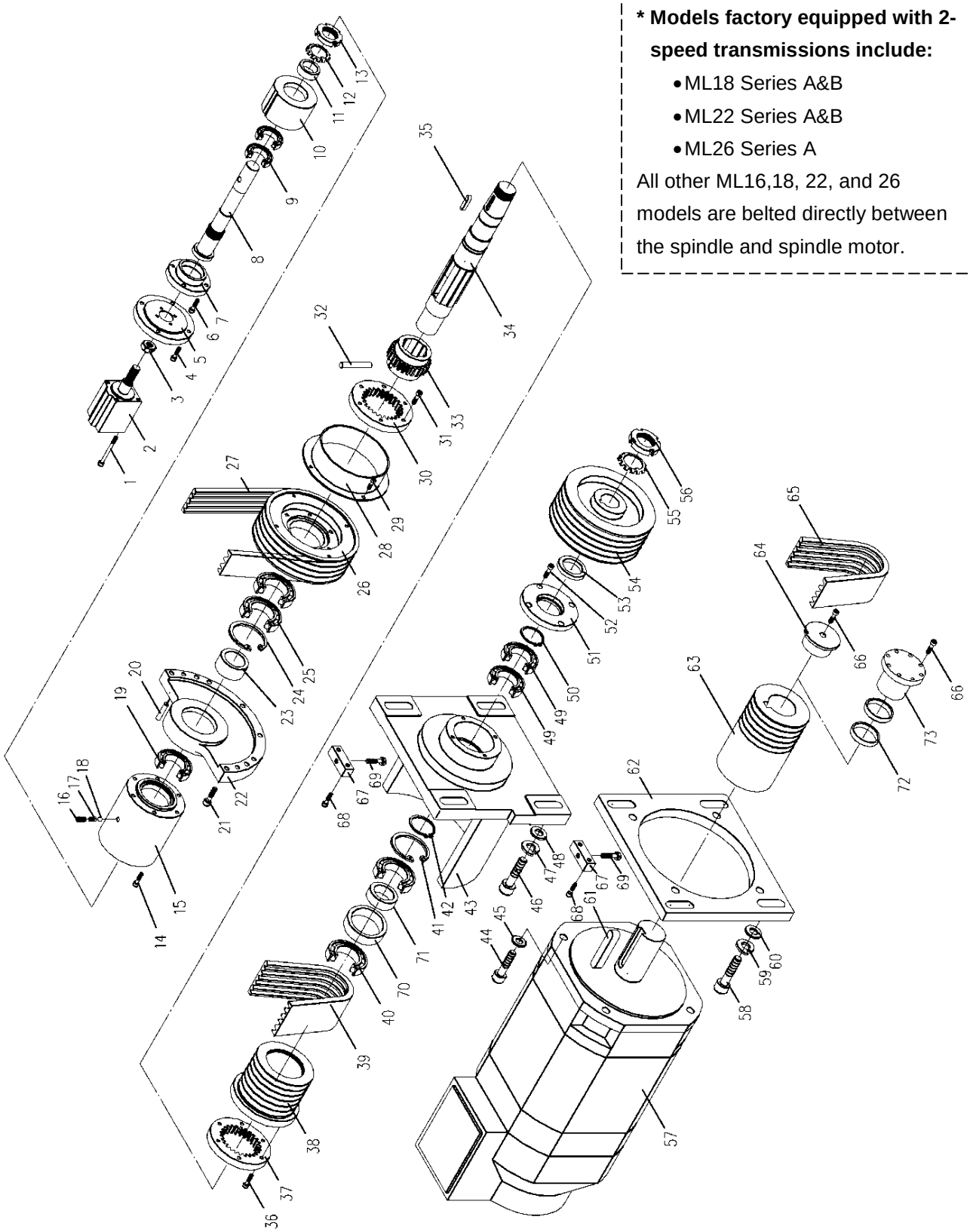

Speed Change Transmission

Item	Part no.	Description	Q'ty	Remark	Milltronics #
1	5001-A05080080	Hex. socket screw	4	M5XP0.8X80L	
2	E-ARAK-85030-01	Air cylinder	1	JDS40X36B-SE2	MPL-594
3	5052-A00014150	Nut	1	M14XP1.5	
4	5001-A06100016	Hex. socket screw	4	M6XP1.0X16L	
5	E-ARAK-85019-01	Bearing cup	1		
6	5001-A06100016	Hex. socket screw	4	M6XP1.0X16L	
7	E-ARAK-85017-01	Bearing cup	1		
8	E-ARAK-85014-03	Shaft - speed change	1	***Verify this part***	MLH-584
	E-ARAK-85035-01	Shaft-speed change	1	Bushing Type	
9	L-0401-00104	Bearing	2	6006ZZCM	BG-162
10	E-ARAK-85018-01	Bearing seat	1		
11	E-ARAK-85016-01	Spacer	1		
12	5087-A00000006	Washer	1	AW-06	
13		Nut	1	AN-06	
14	5001-A06100035	Hex. socket screw	6	M6XP1.0X35L	
15	E-ARAK-85015-01	Housing - cylinder	1		
16	5010-A08125008	Set screw	1	M8XP1.25X8L	
17		Compress spring	1	1/4”X1/4”L	
18		Steel ball	1	1/4"	BG-18
19	L-0401-00106	Bearing	1	6208ZZCM	BG-39
20	5103-A00006040	Taper pin	2	#6X40L	
21	5001-A08125035	Hex. socket screw	6	M8XP1.25X35L	
22	E-ARAK-85002-01	Cover	1		
23	E-ARAK-85005-01	Spacer	1		
24		C-snap	1	RTW-75	
25	L-0401-00107	Bearing	2	6009ZZCM	BG-05
26	E-ARAK-85012-01	Pulley	1		
27	L-0904-00015	Belt (Φ82, 4 Groove)	1	11M1550 (ML22)	BT-81, see #39
	L-0904-00018	Belt (Φ82, Φ106, 4 G-Enlarge)	1	11M1700 (ML22)	
	L-0904-00017	Belt (Φ82, 4 Groove)	1	11M1650 (ML26)	
	L-0904-00025	Belt (Φ82,106,153,4 G-Enlarge)	1	11M1800 (ML26)	
28	E-ARAK-85020-01	Cover	1		
29	5001-A06100012	Hex. socket screw	4	M6XP1.0X12L	
30	E-ARAK-85010-01	Gear	1		
31	5001-A06100020	Hex. socket screw	6	M6XP1.0X20L	
32	E-ARAK-85013-01	Straight pin	1		
33	E-ARAK-85011-01	Gear	1		
34	E-ARAK-85072-01	Shaft	1	6-Groove	
35	5121-C08008035	Key	1	8X8X35L	
36	5001-A06100020	Hex. socket screw	6	M6XP1.0X20L	
37	E-ARAK-85010-01	Gear	1		
38	E-ARAK-85073-01	Pulley	1	6-Groove	
39	L-0904-00015	Belt (Φ82, 6 Groove)	1	11M-1550 (ML22)	BT-81, see #27
	L-0904-00018	Belt (Φ82, Φ106, 6 G-Enlarge)	1	11M-1700 (ML22)	
	L-0904-00017	Belt (Φ82, 6 Groove)	1	11M-1650 (ML26)	
	L-0904-00025	Belt (Φ82,106,153, 6 G-Enlarge)	1	11M-1800 (ML26)	
40	L-0401-00107	Bearing	2	6009ZZCM	BG-05
41	5142-A00000075	C-snap	1	RTW-75	

Item	Part no.	Description	Q'ty	Remark	Milltronics #
42	5141-A00000045	C-snap	1	STW-45	MPH-90
43	E-ARAK-85071-01	Gear box	1	6-Groove	
44	5001-A12175035	Hex. socket screw	4	M12XP1.75X35L	
45	5081-A00000012	Spring washer	4	M12	
46	5001-A16200055	Hex. socket screw	4	M16XP2.0X55L	
47	5081-A00000016	Spring washer	4	M16	
48	5071-A00000016	Flat washer	4	M16	
49	L-0401-00106	Bearing	2	6208ZZCM	BG-39
50	5141-A00000040	C-snap	1	STW-40	
51	E-ARAK-85006-01	Cup	1		
52	5001-A06100016	Hex. socket screw	4	M6XP1.0X16L	
53	L-0604-00003	Oil seal	1	TC-405508	BG-126
54	E-ARAK-85004-01	Pulley (Φ82) 4 Groove	1	***Spacer= MPL-348***	PY-230
	E-ARAK-85091-01	Pulley (Φ82, Φ106, Φ153)	1	4 G-Enlarge	
55	5087-A00000007	Washer	1	AW-07	
56		Nut	1	AN-07	
57	ML22-26 *OPT*	Spindle motor, 11kw dual speed	1	UAASKD-11LYA41	MO-132
	ML22-26 *STD*	Spindle motor, 11kw single spd		UAASKA-11LYA31	MO-150
58	5001-A16200055	Hex. socket screw	4	M16XP2.0X55L	
59	5081-A00000016	Spring washer	4	M16	
60	5071-A00000016	Flat washer	4	M16	
61	5121-C10008070	Key	1	10X8X70L	
62	E-ARAK-07001-01	Motor bracket	1	Fagor	MPL-770?
	E-ARAG-07001-01	Motor bracket	1	Fanuc	
63	*E-ARAK-07002-01*	Pulley, Motor	1		PY-219 with PY-214
	E-ARAK-07031-01	Pulley, Motor	1		
64	E-ARAK-07003-01	Washer	1	Fagor	
	E-ARAK-07023-01	Washer	1	Siemens	
65	L-0904-00002	Belt (Φ82, Φ106,4 Groove)	1	11M1250 = BT-82	BT-82
	L-0904-00023	Belt (Φ82,106,153,4 G-Enlarge)	1	11M-1320	
66	5001-A12175060	SHCS (M12XP1.75X60L)	1	Fagor	
67	E-ARAK-07004-01	Adjusting block	2		
68	5001-A06100020	Hex. socket screw	4	M6XP1.0X20L	
69	5002-A08125025	Hex. bolt	2	M8XP1.25X25L	
70	E-ARAK-85074-01	Spacer	1	6-Groove	
71	E-ARAK-85075-01	Spacer	1	6-Groove	
72	L-1103-00010	Packing toggle(φ48xφ55x10)	2	Fanuc	
73	E-ARAK-07032-01	Fix plate	1	Fanuc	

12. Carriage & Cross Slide

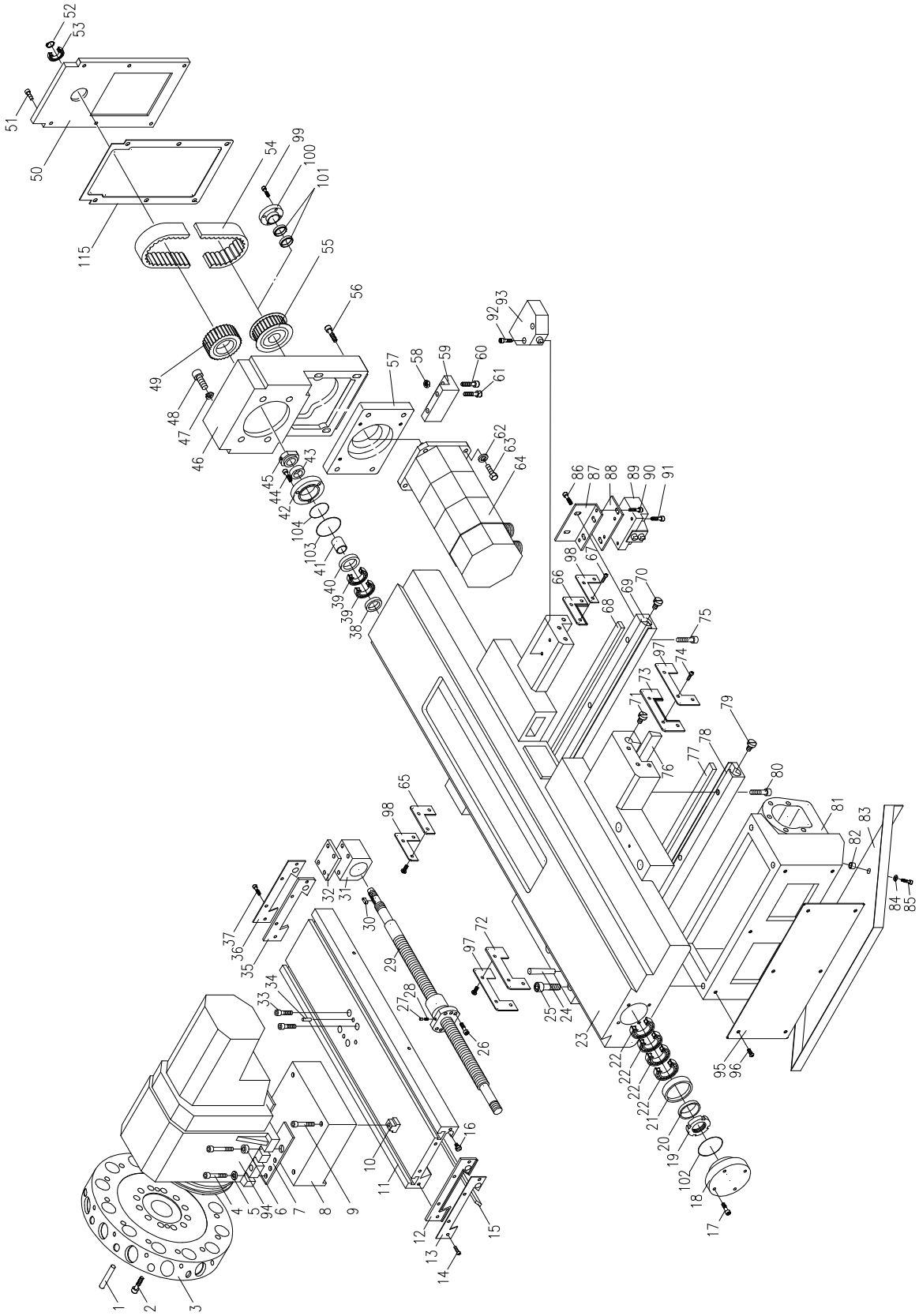

Carriage & Cross Slide

Item	Part no.	Description	Q'ty	Remark	Milltronics #
1	5103-00006070	Taper pin	2	#6 x 70L	
2	5001-B08125055	Hex. socket screw	8	M8XP1.25X55L	
3	E-ARAK-65004-01	VDI disk (front)	1	VDI-40/8T	
	E-ARAG-65001-01	VDI disk (rear)	1	VDI-40/8T	
4	5001-B10150045	Hex. socket screw	8	M10XP1.5X45L	
5	5081-B00000010	Spring washer	8	M10	
6		Pin	1	DIA. 11X17X15L	
7	E-ARAK-65032-01	Spacer	2		
8	E-ARAK-65031-01	Raiser block	1		
	E-ARAM-65061-01	Raiser block	1		
9	5001-B12175070	Hex. bolt	4	M12XP1.75X70L	
10		T block	4	M12	
11	E-ARAK-30001-01	Cross slide	1		MPL0904
12	E-ARAK-30003-02	Wiper	1		9800-132 *
13	E-ARAK-30004-01	Press plate	1		
14	5004-B05080012	Cap screw	4	M5XP0.8X12L	
15	E-ARAK-30002-01	Gib	1		MLT-154
16	2003-56010-400	Adjusting screw	2		
17	5001-B06100020	Hex. socket screw	4	M6XP1.0X20L	
18	E-ARAK-51002-02	Cover	1		
19	L-0251-00002	Nut	1	YSF M25x1.5	
20	E-ARAK-51004-01	Spacer	1		
21	E-ARAK-51003-01	Spacer	1		
22	L-0404-00002	Bearing (4 bearings total)	1 set	25TAC-62B	BG-89
23	E-ARAK-20001-01	Carriage	1		
24	5103-00007080	Taper pin	2	#7X80L	
25	5001-B12175070	Hex. socket screw	2	M12XP1.75X70L	
26	5001-B06100016	Hex. socket screw	6	M6XP1.0X16L	
27	E-ARAK-51005-01	Bushing	1		
28	E-ARAK-51006-01	Spring	1		
29	E-ARAK-51001-01	Ball screw & nut	1		MPL-342
30	5121-C05005020	Key	1	5X5X20L	
31	E-ARAK-51007-01	Yoke	1		
32	E-ARAK-51008-01	Spacer	1		
33	5001-B08125045	Hex. socket screw	4	M8XP1.25X45L	
34		Taper pin	2	#6X50L	
35	E-ARAK-30005-02	Wiper	1	Individual ***- MLT-406*** ,	9800-132 *
36	E-ARAK-30004-01	Press plate	1		
37	5004-B05080012	Cap screw	4	M5XP0.8X12L	
38	L-0604-00001	Oil seal TC-284510	1	***BG-126 BG-156*** ,	MLT-177
39	L-0402-00002	Bearing	1 set	BS25/52/15 DUM	BG-125

Item	Part no.	Description	Q'ty	Remark	Milltronics #
40	E-ARAK-51009-01	Spacer	1		
41	E-ARAK-51010-01	Spacer	1		
42	E-ARAK-51011-02	Cover	1		
43	L-0604-00002	Oil seal	1	TC-354508	BG-211
44	5001-B06100016	Hex. socket screw	4	M6XP1.0X16L	
45	L-0251-00002	Nut	1	YSF M25x1.5	
46	E-ARAK-51013-01	Motor bracket for X axis	1		
47	5081-B00000010	Spring washer	4	M10	
48	5001-B10150035	Hex. socket screw	4	M10XP1.5X435L	
49	E-ARAK-51012-01	Timing belt pulley	1		MLT-188
50	E-ARAK-51014-01	Cover for X motor bracket	1		
51	5001-B06100020	Hex. socket screw	6	M6XP1.0X20L	
52	5141-00000017	C snap	1	STW-17	
53	L-0401-00123	Bearing	1	6203.ZZ	BG-13
54	5162-05200575	Timing belt	1	HTD-5M-575-20	BT-98 or BT-110
55	E-ARAK-51043-01	Timing belt pulley	1	***19mm***	MLT-194
56	5001-B10150050	Hex. socket screw	4	M10XP.15X50L	
57	E-ARAK-51041-01	Motor bracket	1		MLT-447
58	5051-B00010150	Nut	1	M8	
59	E-ARAK-51017-01	Adjusting block	1		
60	5001-B08125055	Hex. socket screw	1	M8XP1.25X55L	
61	5001-B08125055	Hex. socket screw	2	M8XP1.25X55L	
62	5081-B00000008	Spring washer	4	M8	
63	5001-B08125025	Hex. socket screw	4	M8XP1.25X25L	
64		Servo motor, X-axis	1	Sigma V	MO-244 W/Seal BG-214
65	E-ARAK-20008-02	Wiper	1		9800-132 *
66	E-ARAK-20009-02	Wiper	1		
67	5004-B05080012	Cap screw	6	M5XP0.8X12L	
68	E-ARAK-20004-01	Gib	1		MLT-207
69	E-ARAK-20003-01	Press block (rear)	1		
70	2003-56010-400	Adjusting screw	2		
71	2003-56010-400	Adjusting screw	2		
72	E-ARAK-20006-02	Wiper	1		9800-132 *
73	E-ARAK-20007-02	Wiper	1		
74	5004-B05080012	Cap screw	6	M5XP0.8X12L	
75	5001-B12175040	Hex. bolt	4	M12XP1.75X40L	
76	E-ARAK-20005-01	Gib	1		MLT-215
77	E-ARAK-20004-01	Gib	1		MLT-207
78	E-ARAK-20002-01	Press block (front)	1		
79	2003-56010-400	Adjusting screw	2		
80	5001-B12175040	Hex. socket screw	4	M12XP1.75X40L	
81	E-ARAK-53007-02	Yoke for Z axis (2240, 2640)	1		
	E-ARAK-53007-02	Yoke for Z axis (2260, 2660)	1		

Item	Part no.	Description	Q'ty	Remark	Milltronics #
	E-ARAK-53051-01	Yoke for Z axis (2280, 2680)	1		
82	E-ARAK-53014-01	Spacer	2		MLB-120
83	E-ARAK-70038-01	Tray guard	1		
84	5081-B00000008	Spring washer	2	M8	
85	5004-B05080012	Cap screw	2	M5XP0.8X12L	
86	5001-B06100016	Hex. socket screw	2	M6XP1.0X16L	
87	E-ARAK-73016-01	Support for limit switch	1		
88	E-ARAK-73017-01	Block for limit switch	1		
89	Q-0228-00002	Limit switch	1	BNS-819-FD-60-101	SW-203
90	5001-B06100012	Hex. socket screw	2	M6XP1.0X12L	
91	5001-B06100016	Hex. socket screw	2	M6XP1.0X16L	
92	5001-B06100016	Hex. socket screw	2	M6XP1.0X16L	
93	Q-0228-00003	Limit switch	1	BNS-819-B02-D12-61-12-10	SW-200
94		Turret	1	TB-160	
95	E-ARAK-70039-01	Cover	1		
96	5004-B06100012	Cap screw	6	M6XP1.0X12L	
97	E-ARAK-20012-01	Plate	2		
98	E-ARAK-20011-01	Plate	2		
99	5001-B05080025	Hex. socket screw	4	M5XP0.8X25L	
100	E-ARAK-51042-01	Cover	1	Fagor	
101	E-BLDA-53032-01	Packing toggle	2	Fagor φ24xφ28x6.3)	
102	L-0603-00003	O ring	1	S60	
103	L-0603-00002	O ring	1	S50	
104	L-0602-00006	O ring	1	G25	
105	E-ARAK-51024-01	Plate	1		
Not Shown:					
		X axis cable track	1		MPL-329
		Oil compression nut			NU-45
		Oil; compression fitting			NU-108
		Ferrule fitting			NU-38
		Oil meter			NU-337
		Braided oil line			NU-539
		Aluminum oil line			NU-538
**** 9800-132 Includes a set of various wipers***					

13. Carriage & Cross Slide (C-Axis)

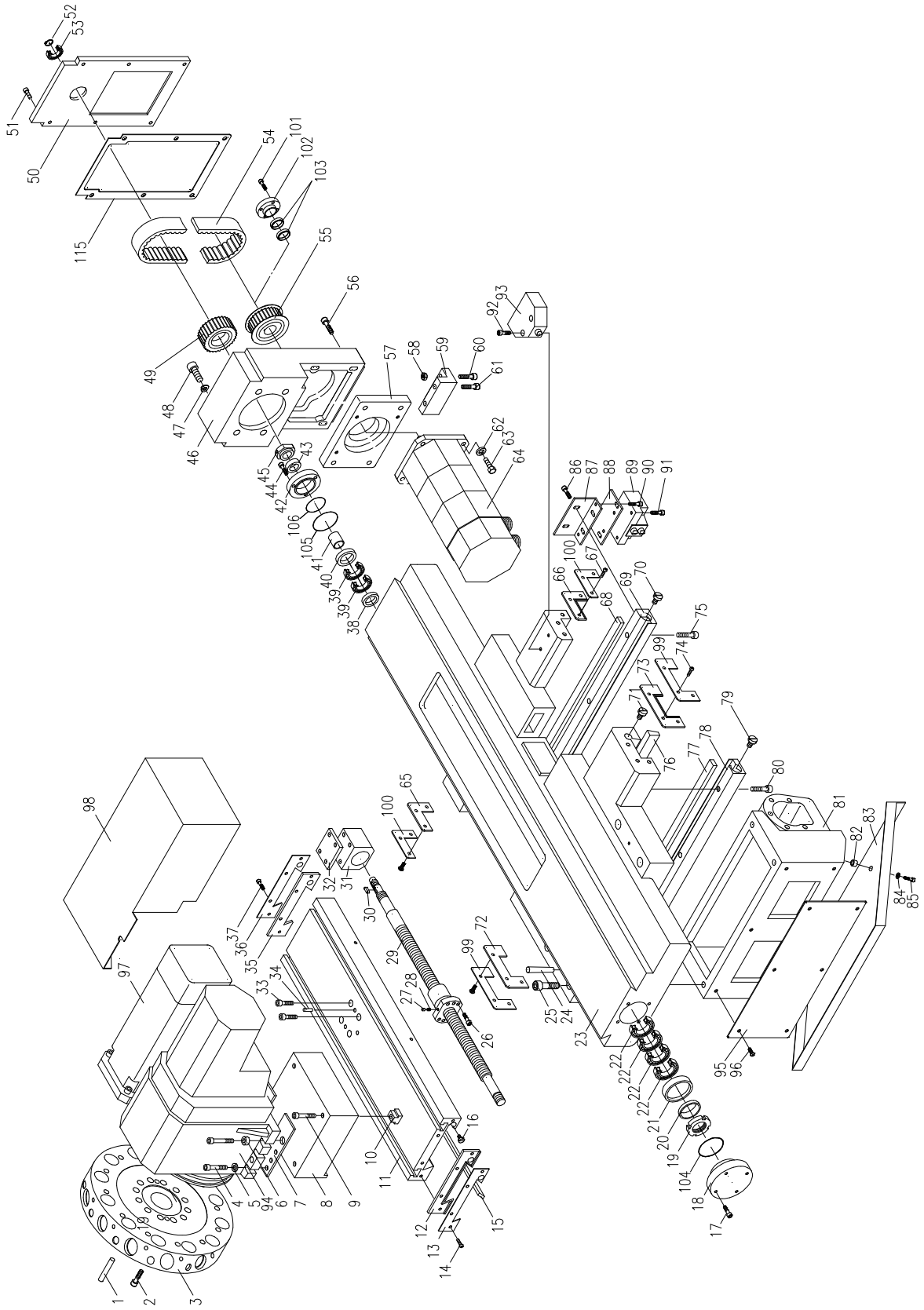

Carriage & Cross Slide (C-Axis)

Item	Part no.	Description	Q'ty	Remark	Milltronics #
1	5103-00006070	Taper pin	2	#6 x 70L	
2	5001-B08125055	Hex. socket screw	8	M8XP1.25X55L	
3		VDI disk (Front)	1	VDI-40/8T	
		VDI disk (Rear)	1	VDI-40/8T	
4	5001-B10150045	Hex. socket screw	8	M10XP1.5X45L	
5	5081-B00000010	Spring washer	8	M10	
6		Pin	1	DIA. 11X17X15L	
7	E-ARAK-65032-01	Spacer	2		
8	E-ARAK-65031-01	Riser block	1		
	E-ARAM-65061-01	Riser block	1		
9	5001-B12175070	Hex. bolt	4	M12XP1.75X70L	
10		T block	4	M12	
11	E-ARAK-30001-01	Cross slide	1		
12	E-ARAK-30003-02	Wiper	1		9800-132 *
13	E-ARAK-30004-01	Press plate	1		
14	5004-B05080012	Cap screw	4	M5XP0.8X12L	
15	E-ARAK-30002-01	Gib	1		MLT-154
16	2003-56010-400	Adjusting screw	2		
17	5001-B06100020	Hex. socket screw	4	M6XP1.0X20L	
18	E-ARAK-51002-02	Cover	1		
19	L-0251-00002	Nut	1	YSF M25x1.5	
20	E-ARAK-51004-01	Spacer	1	*Part of MPL0569*	MPL0569
21	E-ARAK-51003-01	Spacer	1		
22	L-0404-00002	Bearing	1 set	25TAC-62B	BG-89
23	E-ARAK-20001-01	Carriage	1		
24	5103-00007080	Taper pin	2	#7X80L	
25	5001-B12175070	Hex. socket screw	2	M12XP1.75X70L	
26	5001-B06100016	Hex. socket screw	6	M6XP1.0X16L	
27	E-ARAK-51005-01	Busher	1		
28	E-ARAK-51006-01	Spring	1		
29	E-ARAK-51001-01	Ball screw & nut	1		MPL-342
30	5121-C05005020	Key	1	5X5X20L	
31	E-ARAK-51007-01	Yoke	1		
32	E-ARAK-51008-01	Spacer	1		
33	5001-B08125045	Hex. socket screw	4	M8XP1.25X45L	
34		Taper pin	2	#6X50L	
36	E-ARAK-30004-01	Press plate	1		
37	5004-B05080012	Cap screw	4	M5XP0.8X12L	
38	L-0604-00001	Oil seal	1	TC-284510	MLT-177
39	L-0402-00002	Bearing	1 set	BS25/52/15 DUM	BG-125
40	E-ARAK-51009-01	Spacer	1		

10-16 Included In MPL0569

33-37 Included In MPL0569

Item	Part no.	Description	Q'ty	Remark	Milltronics #
41	E-ARAK-51010-01	Spacer	1		
42	E-ARAK-51011-02	Cover	1		
43	L-0604-00002	Oil seal	1	TC-354508	BG-211
44	5001-B06100016	Hex. socket screw	4	M6XP1.0X16L	
45	L-0251-00002	Nut	1	YSF M25x1.5	
46	E-ARAK-51013-01	Motor bracket for X axis	1		
47	5081-B00000010	Spring washer	4	M10	
48	5001-B10150035	Hex. socket screw	4	M10XP1.5X435L	
49	E-ARAK-51012-01	Timing belt pulley	1		MLT-188
50	E-ARAK-51014-01	Cover for X motor bracket	1		
51	5001-B06100020	Hex. socket screw	6	M6XP1.0X20L	
52	5141-00000017	C snap	1	STW-17	
53	L-0401-00123	Bearing	1	6203.ZZ	BG-13
54	5162-05200575	Timing belt	1	HTD-5M-575-20	BT-98 or BT-110
55	E-ARAK-51043-01	Timing belt pulley	1	***19mm***	MLT-194
56	5001-B10150050	Hex. socket screw	4	M10XP.15X50L	
57	E-ARAK-51041-01	Motor bracket	1		MLT-447
58	5051-B00010150	Nut	1	M8	
59	E-ARAK-51017-01	Adjusting block	1		
60	5001-B08125055	Hex. socket screw	1	M8XP1.25X55L	
61	5001-B08125055	Hex. socket screw	2	M8XP1.25X55L	
62	5081-B00000008	Spring washer	4	M8	
63	5001-B08125025	Hex. socket screw	4	M8XP1.25X25L	
64		Servo motor for X axis	1	Sigma V, .9kw	MO-244
65	E-ARAK-20008-02	Wiper	1		9800-132 *
66	E-ARAK-20009-02	Wiper	1		
67	5004-B05080012	Cap screw	6	M5XP0.8X12L	
68	E-ARAK-20004-01	Gib	1	***Included in MPL0569***	MLT-207
69	E-ARAK-20003-01	Press block (rear)	1		
70	2003-56010-400	Adjusting screw	2		
71	2003-56010-400	Adjusting screw	2		
72	E-ARAK-20006-02	Wiper	1		9800-132 *
73	E-ARAK-20007-02	Wiper	1		
74	5004-B05080012	Cap screw	6	M5XP0.8X12L	
75	5001-B12175040	Hex. bolt	4	M12XP1.75X40L	
76	E-ARAK-20005-01	Gib	1	***Included in MPL0569***	MLT-215
77	E-ARAK-20004-01	Gib	1	***Included in MPL0569***	MLT-207
78	E-ARAK-20002-01	Press block (front)	1		
79	2003-56010-400	Adjusting screw	2		
80	5001-B12175040	Hex. socket screw	4	M12XP1.75X40L	
81	E-ARAK-53007-02	Yoke for Z axis	1		
	E-ARAK-53051-01	Yoke for Z axis (22x80)	1		

Item	Part no.	Description	Q'ty	Remark	Milltronics #
82	E-ARAK-53014-01	Spacer	2		MLB-120
83	E-ARAK-70038-01	Tray guard	1		
84	5081-B00000008	Spring washer	2	M8	
85	5004-B08125025	Cap screw	2	M8XP1.25X25L	
86	5001-B06100016	Hex. socket screw	2	M6XP1.0X16L	
87	E-ARAK-73016-01	Support for limit switch	1		
88	E-ARAK-73017-01	Block for limit switch	1		
89	Q-0228-00002	Limit switch	1	BSN-819-FD-60-101	SW-203
90	5001-B06100012	Hex. socket screw	2	M6XP1.0X12L	
91	5001-B06100016	Hex. socket screw	2	M6XP1.0X16L	
92	5001-B06100016	Hex. socket screw	2	M6XP1.0X16L	
93	Q-0228-00003	Limit switch	1	BNS-819-B02-D12-61-12-10	SW-200
94		Turret	1	TBMA-160	
95	E-ARAK-70039-01	Cover	1		
96	5004-B06100012	Cap screw	6	M6XP1.0X12L	
97		Servo motor	1		
98	E-ARAK-55007-01	Cover	1		
99	E-ARAK-20012-01	Plate	2		
100	E-ARAK-20011-01	Plate	2		
101	5001-B05080025	Hex. socket screw	4	M5XP0.8X25L	
102	E-ARAK-51042-01	Cover	1		
103	E-BLDA-53032-01	Packing toggle(φ24xφ28x6.3)	2		
104	L-0603-00003	O ring	1	S60	
105	L-0603-00002	O ring	1	S50	
106	L-0602-00006	O ring	1	G25	
107	E-ARAK-51024-01	Plate	1		
Not Shown:					
		X axis cable track	1		MPL-329
		Oil compression nut			NU-45
		Oil; compression fitting			NU-108
		Ferrule fitting			NU-38
		Oil meter			NU-337
		Braided oil line			NU-539
		Aluminum oil line			NU-538
**** 9800-132 Includes a set of various wipers***					

14. Bed for 40/60/80” length

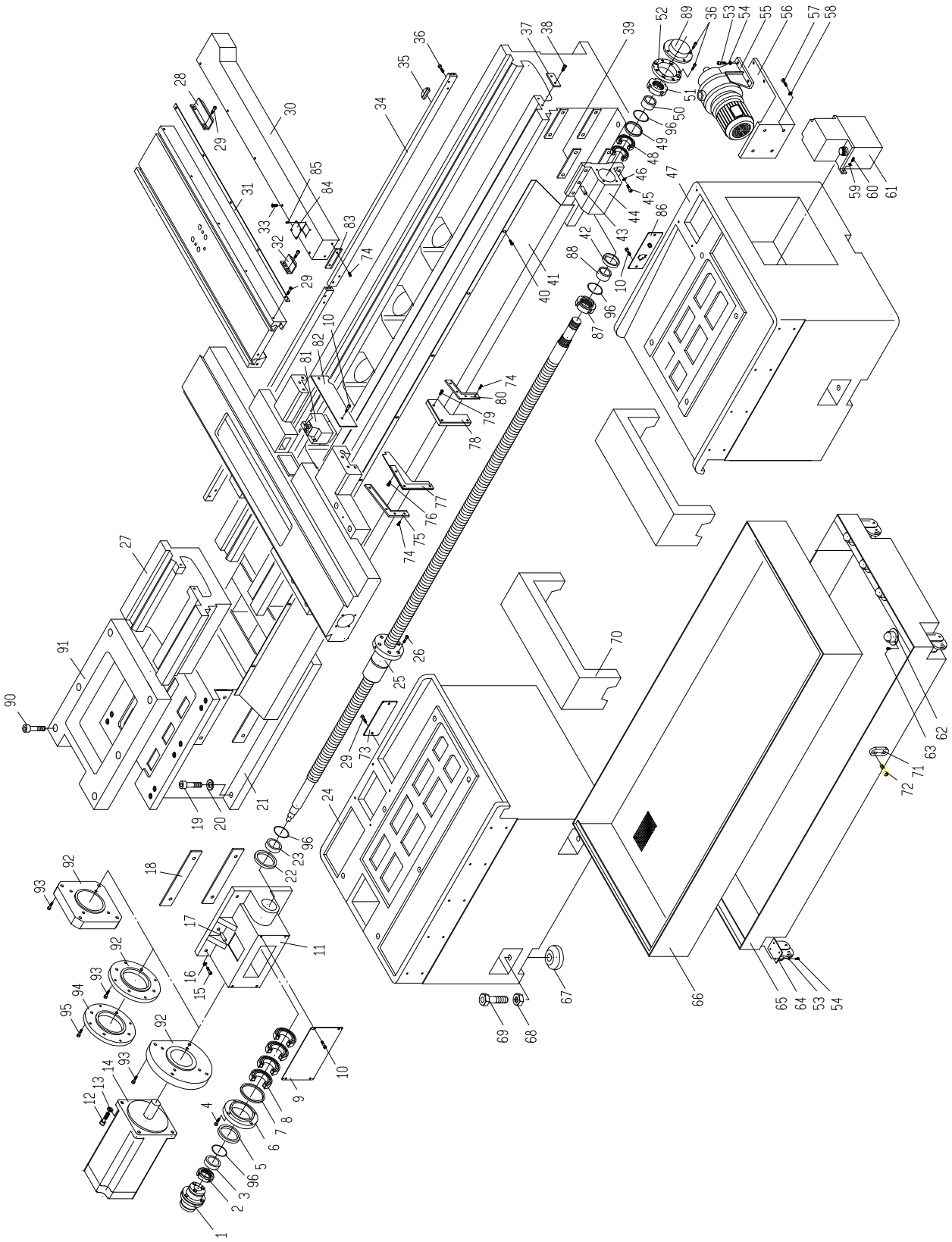

Bed for 40/60/80" length

Item	Part no.	Description	Q'ty	Remark	Milltronics #
1	L-1101-00005	Coupling	1	For 2KW motor	MA-238
2	L-0251-00003	Nut (22/26x40)	1	YSF M30x1.5	
	L-0251-00003	Nut (22/26x60)	1	YSF M30x1.5	
	L-0251-00001	Nut (22/26x80)	1	YSF M35x1.5	
3	E-ARAK-53005-01	Spacer (22/26x40)	1		MLB-120
	E-ARAK-53005-01	Spacer (22/26x60)	1		MLB-120
	E-ARAK-53047-01	Spacer (22/26x80)	1		
4	5001-B06100020	Hex. socket screw	4	M6XP1.0X20L	
5	L-0604-00004	Oil seal (22/26x40)	1	TC-455508	MLB-122
	L-0604-00004	Oil seal (22/26x60)	1	TC-455508	MLB-122
	L-0604-00023	Oil seal (22/26x80)	1	TC-506209	
6	E-ARAK-53004-02	Cover (22/26x40)	1		
	E-ARAK-53004-02	Cover (22/26x60)	1		
	E-ARAK-53046-01	Cover (22/26x80)	1		
7	E-ARAK-53006-01	Spacer (22/26x40)	1		
	E-ARAK-53006-01	Spacer (22/26x60)	1		
	E-ARAK-53048-01	Spacer (22/26x80)	1		
8	L-0404-00003	Bearing (22/26x40)	1	30TAC-62B	BG-47
	L-0404-00003	Bearing (22/26x60)	1	30TAC-62B	BG-47
	L-0404-00005	Bearing (22/26x80)	1	35TAC-72B	BG-131
9	E-ARAK-70050-01	Cover	1		
10	5004-B06100012	Cap screw	4	M6XP1.0X12L	
11	E-ARAK-53003-01	Bearing bracket for Z axis	1	(22/26x40)	
	E-ARAK-53003-01	Bearing bracket for Z axis	1	(22/26x60)	
	E-ARAK-53045-01	Bearing bracket for Z axis	1	(22/26x80)	
12	5001-B08125035	Hex. socket screw	4	M8XP1.25X35L	
13	5081-B00000008	Spring washer	4	M8	
14		Servo motor	1	*Sigma V*	MO-248
15	5001-B12175050	Hex. bolt	4	M12XP1.25X50L	
16	5081-B00000012	Spring washer	4	M12	
17	5102-A00007070	Taper pin	2	#7X70L	*Updated # 4-2012*
18	E-ARAK-53010-01	Spacer	2		
19	5001-B16200060	Hex. socket screw	10	M16XP2.0X60L	
20	5081-B00000016	Spring washer	10	M16	
21	E-ARAK-10001-01	Bed (22/26x40)	1		
	E-ARAK-10031-01	Bed (22/26x60)	1		
	E-ARAK-10041-01	Bed (22/26x80)	1		
22	L-0604-00004	Oil seal (22/26x40)	1	TC-455508	MLB-122
	L-0604-00004	Oil seal (22/26x60)	1	TC-455508	MLB-122
	L-0604-00006	Oil seal (22/26x80)	1	TC-506209	
23	E-ARAK-53005-01	Spacer (22/26x40)	1		MLB-120
	E-ARAK-53005-01	Spacer (22/26x60)	1		
	E-ARAK-53047-01	Spacer (22/26x80)	1		
24	E-ARAK-40001-01	Left stand	1		
25	E-ARAK-53001-02	Ballscrew (22/26x40)	1		MPL-820
	E-ARAK-53031-02	Ballscrew (22/26x60)	1		
	E-ARAK-53043-01	Ballscrew (22/26x80)	1		
26	5001-B10150025	Hex. socket screw	5	M10XP1.5X25L	

Item	Part no.	Description	Q'ty	Remark	Milltronics #
27	E-ARAK-10001-01	Gap	1		
28	E-ARAK-73018-03	Stop block	1		MLB-149
29	5001-B06100016	Hex. socket screw	9	M6XP1.0X16L	
30	E-ARAK-73015-03	Wire track	1		
31	E-ARAK-73015-03	Wire track bracket	1		
32	E-ARAK-73019-02	Stop block	1		
33	5007-B06100010	Cap screw	5	M6XP1.0X10L	
34	E-ARAK-10002-01	Dog guide	2		
35	E-ARAK-10004-01	Dog	3		MPL-735
36	5001-B06100016	Hex. socket screw	8	M6XP1.0X16L	
37	E-ARAK-70028-01	Stop	1		
38	5004-B06100012	Cap screw	2	M6XP1.0X12L	
39	E-ARAK-53011-01	Spacer	2		
40	5004-B06100012	Cap screw	10	M6XP1.0X12L	
41	E-ARAK-70027-02	Ballscrew cover	1		
42	L-0604-00004	Oil seal (22/26x40)	1	TC-455508	MLB-122
	L-0604-00004	Oil seal (22/26x60)	1	TC-455508	MLB-122
	L-0604-00006	Oil Seal (22/26x80)	1	TC-506209	
43	5102-A00006050	Taper pin	2	#6X50L	
44	E-ARAK-53008-01	Bearing bracket for Z axis	1	(22/26x40)	
	E-ARAK-53008-01	Bearing bracket for Z axis	1	(22/26x60)	
	E-ARAK-53049-02	Bearing bracket for Z axis	1	(22/26x80)	
45	5001-B12175050	Hex. socket screw	4	M12XP1.75X50L	
46	5081-B00000012	Spring washer	4	M12	
47	E-ARAK-40002-02	Right stand	1		
48	L-0404-00004	Bearing (22/26x40)	1	30TAC 62	BG-47
	L-0404-00004	Bearing (22/26x60)	1	30TAC 62	BG-47
	L-0404-00005	Bearing (22/26x80)	1	35TAC-72B	BG-131
49	E-ARAK-53006-01	Spacer (22/26x40)	1		
	E-ARAK-53006-01	Spacer (22/26x60)	1		
	E-ARAK-53048-01	Spacer (22/26x80)			
50	E-ARAK-53005-01	Spacer (22/26x40)	1		MLB-120
	E-ARAK-53005-01	Spacer (22/26x60)	1		MLB-120
	E-ARAK-53047-01	Spacer (22/26x80)	1		
51	L-0251-00003	Nut (22/26x40)	1	YSF M30x1.5	MLB-119
	L-0251-00003	Nut (22/26x60)	1	YSF M30x1.5	MLB-119
	L-0251-00001	Nut (22/26x80)	1	YSF M35x1.5	
52	E-ARAK-53009-02	Cover (22/26x40)	1		
	E-ARAK-53009-02	Cover (22/26x60)	1		
	E-ARAK-53050-01	Cover (22/26x80)	1		
53	5001-B08125016	Hex. socket screw	20	M8XP1.25X16L	
54	5081-B00000008	Spring washer	20	M8	
55		Coolant pump	1	TPH2T-2K	MA-290
56	E-ARAK-70042-01	Pump bracket	1		MA-351
57	5001-B08125020	Hex. socket screw	4	M8XP1.25X20L	
58	5081-B00000008	Spring washer	4	M8	
59	5001-B06100016	Hex. socket screw	2	M6XP1.0X16L	
60	5081-B00000006	Spring washer	2	M6	
61		Automatic lubrication pump	1	CEN1-01-2L-A-3	MA-458
62	5001-B05080012	Hex. socket screw	16	M5XP0.8X12L	

Item	Part no.	Description	Q'ty	Remark	Milltronics #
63		Roller	8	1"	
64		Roller wheel	4	3"DX1.2"T	
65	E-ARAK-41001-03	Coolant tank	1		
66	E-ARAK-41002-03	Coolant tray	1		
67	E-ARAK-40004-01	Leveling block	6		
68	E-ARAK-40003-01	Leveling bolt	6		MLB-185
69	E-ARAK-40003-01	Nut	6		
70	E-ARAK-41003-01	Tank support	2		
71	L-0701-00001	Oil glass	1	LS-3"	NU-344
72	5002-B10150030	Spacer	2	M10XP1.5X30L	
73	E-ARAK-70045-01	Cover	1		
74	5004-B05080012	Cap screw	8	M5XP0.8X12L	
75	E-ARAK-70057-01	Wiper	1		9800-132 *
76	5004-B06100016	Cap screw	3	M6XP1.0X16L	
77	E-ARAK-70048-02	Wiper support	1		9800-132 *
78	E-ARAK-70049-01	Wiper support	1		9800-132 *
79	5004-B06100020	Cap screw	4	M6XP1.0X20L	
80	E-ARAK-70056-01	Wiper	1		9800-132 *
81	Q-0228-00002	Limit switch	1	BNS-819-FD-60-101	SW-203
82	E-ARAK-73027-01	Cover	1		
83	E-ARAK-70058-01	Wiper	1		9800-132 *
84	E-ARAK-73033-01	Cover	1		
85	5004-B03050006	Cap screw	4	M3XP0.5X6L	
86	E-ARAK-73028-01	Cover	1		
87	L-0251-00001	Nut (22/26x40)	1	M35x1.5	
	L-0251-00001	Nut (22/26x60)	1	M35x1.5	
	L-0251-00005	Nut (22/26x80)	1	M40x1.5	
88	E-ARAK-53018-01	Spacer (22/26x40)	1		
	E-ARAK-53018-01	Spacer (22/26x60)	1		
	E-ARAK-53052-01	Spacer (22/26x80)	1		
89	E-ARAK-53015-03	Cover (22/26x40)	1		
	E-ARAK-53015-03	Cover (22/26x60)	1		
	E-ARAK-53044-04	Cover (22/26x80)	1		
90	5001-B16200060	Hex. socket screw (ML26)	6	M16XP2.0X60L	
91	E-ARAK-00021-01	Block (ML-26)			
92	E-ARAK-53061-01	Motor bracket	1		
93	5001-B08125025	SHCS (M8XP1.25X25L)	4		
94	E-ARAK-53065-01	Motor bracket	1		
95	5001-B08125016	SHCS (M8XP1.25X16L)	4		
96	L-0602-00002	O ring (ML-22/2640, ML-22/2660)	4	G30	
	L-0602-00011	O ring (ML-22/2680)	4	G35	

15. Bed for 120” length

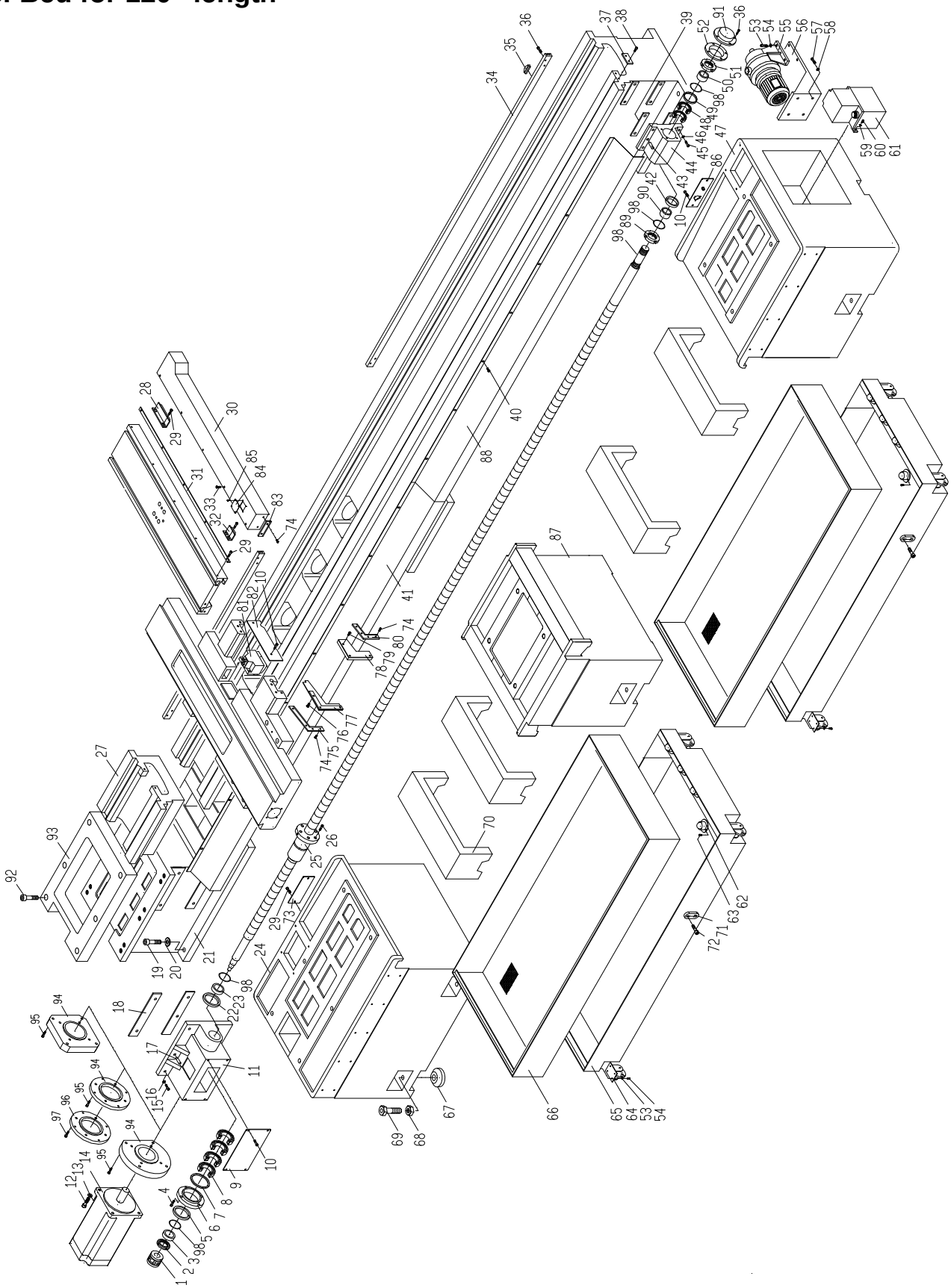

Bed for 120” length

Item	Part no.	Description	Q'ty	Remark	Milltronics #
1	L-1101-00005	Coupling	1	For 2kw motor	MA-238
2	L-0251-00001	Nut	1	YSF M35x1.5	
3	E-ARAK-53047-01	Spacer	1		
4	5001-B06100020	Hex. socket screw	4	M6XP1.0X20L	
5	L-0604-00023	Oil seal	1	TC-506209	
6	E-ARAK-53046-01	Cover	1		
7	E-ARAK-53048-01	Spacer	1		
8	L-0404-00005	Bearing	1	35TAC-72B	BG-131
9	E-ARAK-70050-01	Cover	1		
10	5004-B06100012	Cap screw	4	M6XP1.0X12L	
11	E-ARAK-53045-01	Bearing bracket for Z axis	1		
12	5001-B08125035	Hex. socket screw	4	M8XP1.25X35L	
13	5081-B00000008	Spring washer	4	M8	
14		Servo motor	1	3 KW Sigma V	MO-250
15	5001-B12175050	Hex. bolt	4	M12XP1.25X50L	
16	5081-B00000012	Spring washer	4	M12	
17	5102-A00006050	Taper pin	2	#7X70L	Updated # 4-2012
18	E-ARAK-53010-01	Spacer	2		
19	5001-B16200060	Hex. socket screw	14	M16XP2.0X60L	
20	5081-B00000016	Spring washer	14	M16	
21	E-ARAK-10051-01	Bed	1		
22	L-0604-00004	Oil seal	1	TC-506209	
23	E-ARAK-53047-01	Spacer	1		
24	E-ARAK-40001-01	Left stand	1		
25	E-ARAK-53201-01	Ballscrew	1		
26	5001-B10150025	Hex. socket screw	5	M10XP1.5X25L	
27	E-ARAK-10001-01	Gap	1		
28	E-ARAK-73018-03	Stop block	1		MLB-149
29	5001-B06100016	Hex. socket screw	9	M6XP1.0X16L	
30	E-ARAK-73015-03	Wire track	1		
31	E-ARAK-73015-03	Wire track bracket	1		
32	E-ARAK-73019-02	Stop block	1		
33	5007-B06100010	Cap screw	5	M6XP1.0X10L	
34	E-ARAK-10002-01	Dog guide	2		
35	E-ARAK-10004-01	Dog	3		MPL-59
36	5001-B06100016	Hex. socket screw	8	M6XP1.0X16L	
37	E-ARAK-70028-01	Stop	1		
38	5004-B06100012	Cap screw	2	M6XP1.0X12L	
39	E-ARAK-53011-01	Spacer	2		
40	5004-B06100012	Cap screw	10	M6XP1.0X12L	
41	E-ARAK-70221-01	Ballscrew cover	1		
42	L-0604-00006	Oil seal	1	TC-506209	
43	5102-A00006050	Taper pin	2	#6X50L	
44	E-ARAK-53049-02	Bearing bracket for Z axis	1		
45	5001-B12175050	Hex. socket screw	4	M12XP1.75X50L	
46	5081-B00000012	Spring washer	4	M12	
47	E-ARAK-40002-02	Right stand	1		
48	L-0404-00005	Bearing	2	35TAC-72B	BG-131

Item	Part no.	Description	Q'ty	Remark	Milltronics #
49	E-ARAK-53048-01	Spacer	1		
50	E-ARAK-53047-01	Spacer	1		
51	L-0251-00001	Nut	1	YSF M35x1.5	MPL-427
52	E-ARAK-53050-01	Cover	1		
53	5001-B08125016	Hex. socket screw	20	M8XP1.25X16L	
54	5081-B00000008	Spring washer	20	M8	
55		Coolant pump	1	TPH2T-2K	MA-290
56	E-ARAK-70042-01	Pump bracket	1		
57	5001-B08125020	Hex. socket screw	4	M8XP1.25X20L	
58	5081-B00000008	Spring washer	4	M8	
59	5001-B06100016	Hex. socket screw	2	M6XP1.0X16L	
60	5081-B00000006	Spring washer	2	M6	
61		Automatic lubrication pump	1	CEN1-01-2L-A-3	MA-458
62	5001-B05080012	Hex. socket screw	32	M5XP0.8X12L	
63		Roller	16	1"	
64		Roller wheel	8	3"DX1.2"T	
65	E-ARAK-41001-01	Coolant tank	2		
66	E-ARAK-41002-02	Coolant tray	2		
67	E-ARAK-40004-01	Leveling block	8		
68	E-ARAK-40003-01	Leveling bolt	8		MLB-185
69	E-ARAK-40003-01	Nut	8		
70	E-ARAK-41003-01	Tank support	4		
71	L-0701-00001	Oil glass	1	LS-3"	NU-344
72	5002-B10150030	Screw	2	M10XP1.5X30L	
73	E-ARAK-70045-01	Cover	1		
74	5004-B05080012	Cap screw	8	M5XP0.8X12L	
75	E-ARAK-70057-01	Wiper	1		9800-132 *
76	5004-B06100016	Cap screw	3	M6XP1.0X16L	
77	E-ARAK-70048-02	Wiper support	1		9800-132 *
78	E-ARAK-70049-01	Wiper support	1		9800-132 *
79	5004-B06100020	Cap screw	4	M6XP1.0X20L	
80	E-ARAK-70056-01	Wiper	1		9800-132 *
81	Q-0228-00002	Limit switch	1	BNS-819-FD-60-101	SW-203
82	E-ARAK-73027-01	Cover	1		
83	E-ARAK-70058-01	Wiper	1		9800-132 *
84	E-ARAK-73033-01	Cover	1		
85	5004-B03050006	Cap screw	4	M3XP0.5X6L	
86	E-ARAK-73028-01	Cover	1		
87	E-ARAK-40011-01	Stand	1		
88	E-ARAK-70225-01	Ballscrew cover	1		
89	L-0251-00005	Nut	1	M40xP1.5	
90	E-ARAK-53052-01	Spacer	1		
91	E-ARAK-53044-01	Cover	1		
92	5001-B16200060	Hex. socket screw (ML26)	6	M16XP2.0X60L	
93	E-ARAK-00021-01	Block (ML26)			
94	E-ARAK-53061-01	Motor bracket	1		
95	5001-B08125025	SHCS (M8XP1.25X25L)	4		
96	E-ARAK-53065-01	Motor bracket	1		
97	5001-B08125016	SHCS (M8XP1.25X16L)	4		
98	L-0602-00011	O ring	4	G35	

16. Bed for 160” length

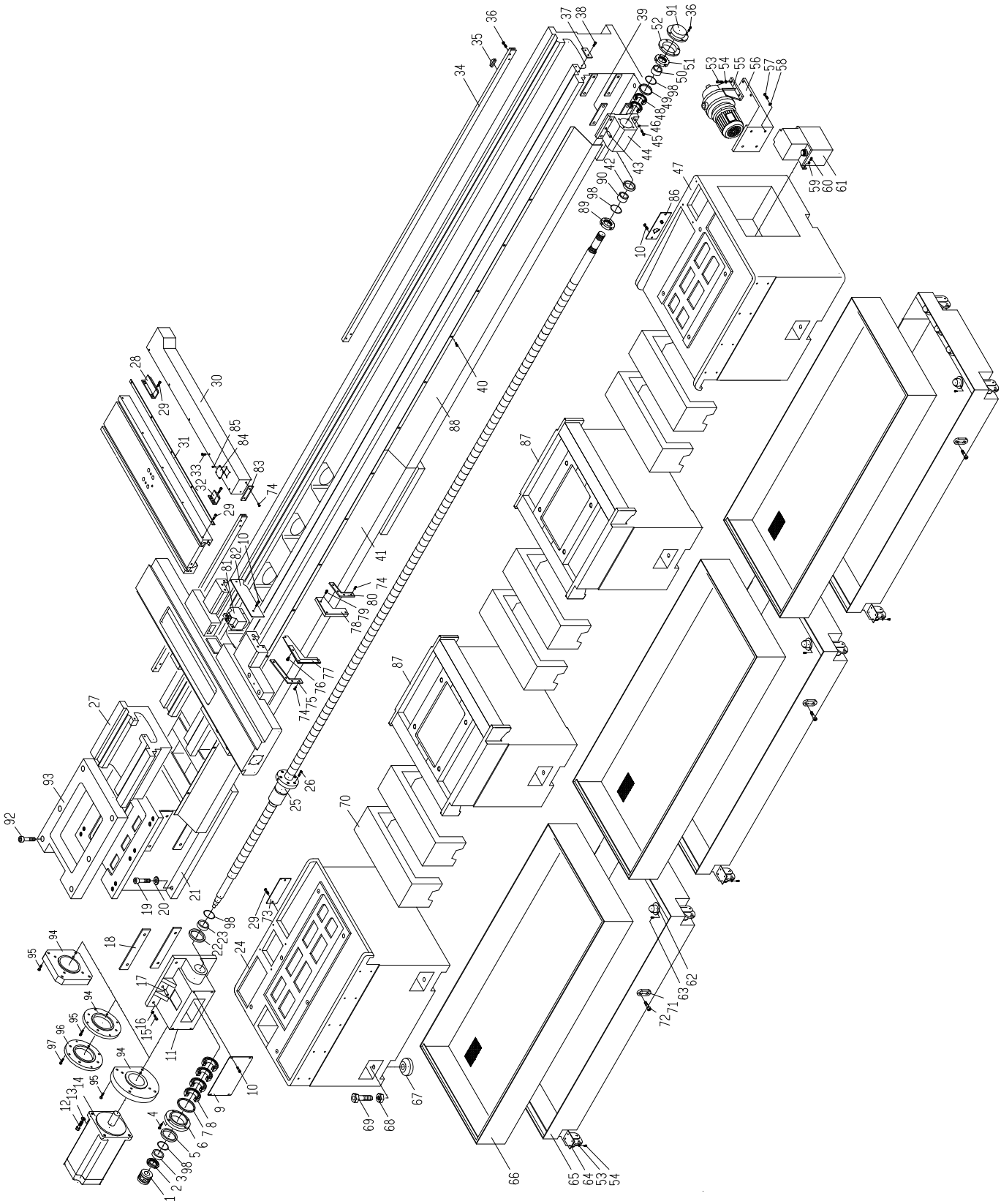

Bed for 160” length

Item	Part no.	Description	Q'ty	Remark	Milltronics #
1	L-1101-00005	Coupling	1		
2	L-0251-00001	Nut	1	YSF M35x1.5	
3	E-ARAK-53047-01	Spacer	1		
4	5001-B06100020	Hex. socket screw	4	M6XP1.0X20L	
5	L-0604-00006	Oil seal	1	TC-506209	
6	E-ARAK-53046-01	Cover	1		
7	E-ARAK-53048-01	Spacer	1		
8	L-0404-00005	Bearing	1	35TAC-72B	BG-131
9	E-ARAK-70050-01	Cover	1		
10	5004-B06100012	Cap screw	4	M6XP1.0X12L	
11	E-ARAK-53045-01	Bearing bracket for Z axis	1		
12	5001-B08125035	Hex. socket screw	4	M8XP1.25X35L	
13	5081-B00000008	Spring washer	4	M8	
14		Servo motor	1	3 KW Sigma V	MO-250
15	5001-B12175050	Hex. bolt	4	M12XP1.25X50L	
16	5081-B00000012	Spring washer	4	M12	
17	5102-A00007070	Taper pin	2	#7X70L	Updated # 4-2012
18	E-ARAK-53010-01	Spacer	2		
19	5001-B16200060	Hex. socket screw	14	M16XP2.0X60L	
20	5081-B00000016	Spring washer	14	M16	
21	E-ARAK-10051-01	Bed	1		
22	L-0604-00004	Oil seal	1	TC-506209	
23	E-ARAK-53047-01	Spacer	1		
24	E-ARAK-40001-01	Left stand	1		
25	E-ARAK-53201-01	Ballscrew	1		
26	5001-B10150025	Hex. socket screw	5	M10XP1.5X25L	
27	E-ARAK-10001-01	Gap	1		
28	E-ARAK-73018-03	Stop block	1		
29	5001-B06100016	Hex. socket screw	9	M6XP1.0X16L	
30	E-ARAK-73015-03	Wire track	1		
31	E-ARAK-73015-03	Wire track bracket	1		
32	E-ARAK-73019-02	Stop block	1		
33	5007-B06100010	Cap screw	5	M6XP1.0X10L	
34	E-ARAK-10002-01	Dog guide	3		
35	E-ARAK-10004-01	Dog	3		MPL-59
36	5001-B06100016	Hex. socket screw	8	M6XP1.0X16L	
37	E-ARAK-70028-01	Stop	1		
38	5004-B06100012	Cap screw	2	M6XP1.0X12L	
39	E-ARAK-53011-01	Spacer	2		
40	5004-B06100012	Cap screw	10	M6XP1.0X12L	
41	E-ARAK-70221-01	Ballscrew cover	1		

Item	Part no.	Description	Q'ty	Remark	Milltronics #
42	L-0604-00006	Oil seal	1	TC-506209	
43	5102-A00007070	Taper pin	2	#7X70L	Updated # 4-2012
44	E-ARAK-53049-02	Bearing bracket for Z axis	1		
45	5001-B12175050	Hex. socket screw	4	M12XP1.75X50L	
46	5081-B00000012	Spring washer	4	M12	
47	E-ARAK-40002-02	Right stand	1		
48	L-0404-00005	Bearing	2	35TAC-72B	BG-131
49	E-ARAK-53048-01	Spacer	1		
50	E-ARAK-53047-01	Spacer	1		
51	L-0251-00001	Nut	1	YSF M35x1.5	MPL-427
52	E-ARAK-53050-01	Cover	1		
53	5001-B08125016	Hex. socket screw	30	M8XP1.25X16L	
54	5081-B00000008	Spring washer	30	M8	
55		Coolant pump	1	TPH2T-2K	MA-290
56	E-ARAK-70042-01	Pump bracket	1		
57	5001-B08125020	Hex. socket screw	4	M8XP1.25X20L	
58	5081-B00000008	Spring washer	4	M8	
59	5001-B06100016	Hex. socket screw	2	M6XP1.0X16L	
60	5081-B00000006	Spring washer	2	M6	
61		Automatic lubrication pump	1	CEN1-01-2L-A-3	MA-458
62	5001-B05080012	Hex. socket screw	48	M5XP0.8X12L	
63		Roller	24	1"	
64		Roller wheel	12	3"DX1.2"T	
65	E-ARAK-41001-01	Coolant tank	3		
66	E-ARAK-41002-02	Coolant tray	3		
67	E-ARAK-40004-01	Leveling block	8		
68	E-ARAK-40003-01	Leveling bolt	8		
69	E-ARAK-40003-01	Nut	8		
70	E-ARAK-41003-01	Tank support	6		
71	L-0701-00001	Oil glass	3	LS-3"	NU-344
72	5002-B10150030	Screw	3	M10XP1.5X30L	
73	E-ARAK-70045-01	Cover	1		
74	5004-B05080012	Cap screw	8	M5XP0.8X12L	
75	E-ARAK-70057-01	Wiper	1		9800-132 *
76	5004-B06100016	Cap screw	3	M6XP1.0X16L	
77	E-ARAK-70048-02	Wiper support	1		9800-132 *
78	E-ARAK-70049-01	Wiper support	1		9800-132 *
79	5004-B06100020	Cap screw	4	M6XP1.0X20L	
80	E-ARAK-70056-01	Wiper	1		9800-132 *
81	Q-0228-00002	Limit switch	1	BNS-819-FD-60-101	SW-203
82	E-ARAK-73027-01	Cover	1		
83	E-ARAK-70058-01	Wiper	1		9800-132 *
84	E-ARAK-73033-01	Cover	1		

Item	Part no.	Description	Q'ty	Remark	Milltronics #
85	5004-B03050006	Cap screw	4	M3XP0.5X6L	
86	E-ARAK-73028-01	Cover	1		
87	E-ARAK-40011-01	Stand	2		
88	E-ARAK-70225-01	Ballscrew cover	1		
89	L-0251-00005	Nut	1	M40xP1.5	
90	E-ARAK-53052-01	Spacer	1		
91	E-ARAK-53044-01	Cover	1		
92	5001-B16200060	Hex. socket screw (ML26)	6	M16XP2.0X60L	
93	E-ARAK-00021-01	Block (ML26)			
94	E-ARAK-53061-01	Motor bracket	1		
95	5001-B08125025	SHCS (M8XP1.25X25L)	4		
96	E-ARAK-53065-01	Motor bracket	1		
97	5001-B08125016	SHCS (M8XP1.25X16L)	4		
98	L-0602-00011	O ring	4	G35	

17. Z-AXIS for 120” Bed Length

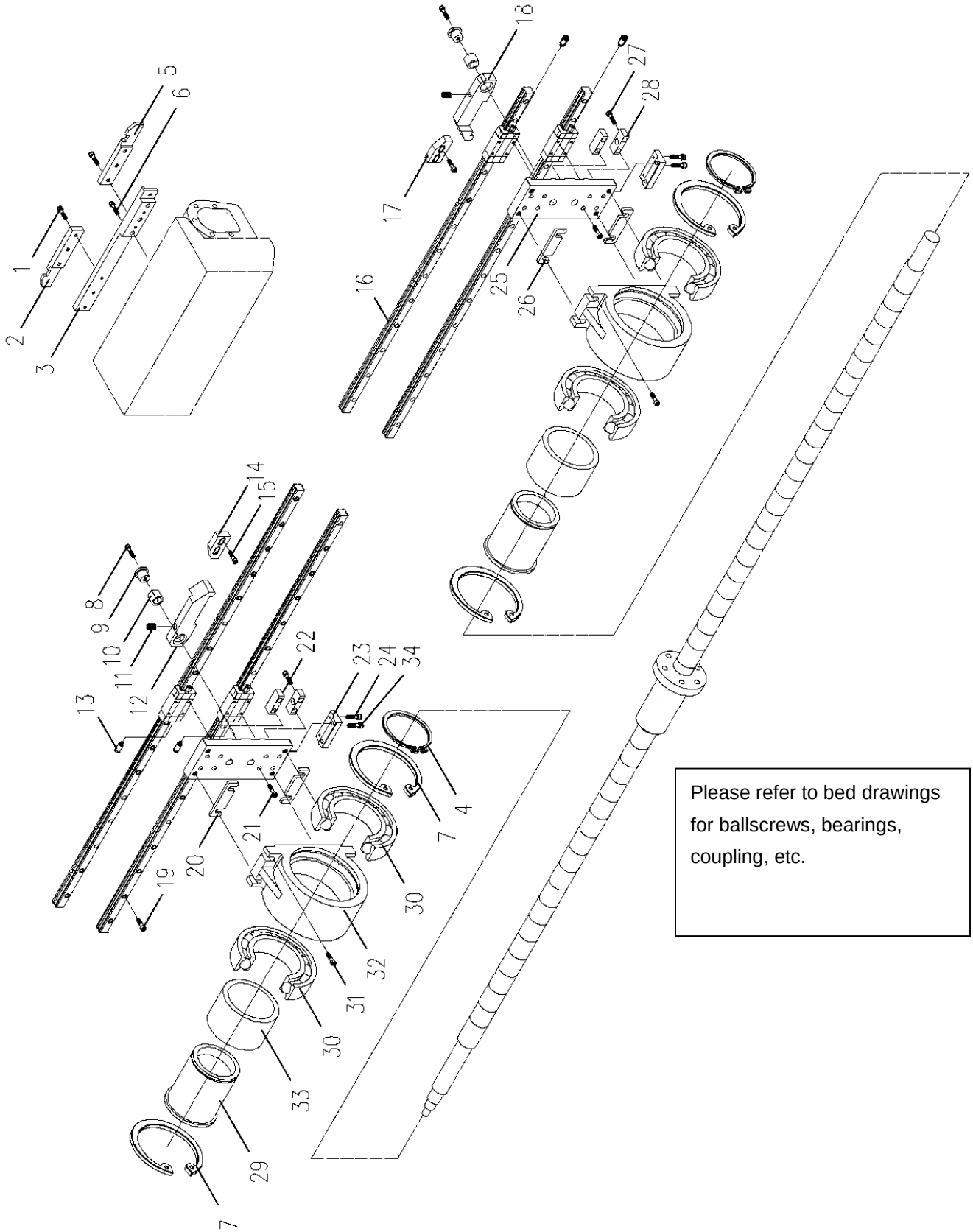

Please refer to bed drawings for ballscrews, bearings, coupling, etc.

Z-AXIS for 120” Bed Length

Item	Part no.	Description	Q'ty	Remark	Milltronics #
1		Hex. socket screw	6	M6XP1X16L	
2	E-ARAQ-53236-01	Hook of traveling support (Left)	1		MPL-524
3	E-ARAK-53126-01	Bracket for hook	1		MPL-486
4		C snap	2	STW-65	
5	E-ARAQ-53235-01	Hook of traveling support (Right)	1		MPL-526
6		Hex. socket screw	3	M8XP1.25X35L	
7		C snap	4	RTW-90	
8		Hex. socket screw	2	M8XP1.25X20L	
9	E-ARAQ-53229-01	Shaft	2		
10	E-ARAQ-20024-01	Bushing	2	TEP 20X23X12	
11	E-ARAQ-53230-01	Spring	2		
12	E-ARAK-53125-01	Hook out of left side support	1		
13	E-ARAK-53130-01	Connector	4		
14	E-ARAQ-53231-01	Stopper	1		
15		Hex. socket screw	4	M6XP1X20L	
16	E-ARAK-53127-01	Linear way	4	ABBA-BRS-20	
		Linear way block only			
17	E-ARAQ-53232-01	Stopper	1		
18	E-ARAK-53129-01	Hook out of right side support	1		
19		Hex. socket screw	88	M5XP0.8X20L	
20	E-ARAQ-53224-01	Spacer	2		
21		Hex. socket screw	16	M5XP0.8X16L	
22	E-ARAQ-53228-01	Stopper	2		
23	E-ARAQ-53226-01	Adjusting plate	2		
24		Hex. socket screw	2	M6XP1X20L	
25	E-ARAK-53124-01	Sliding plate	2		
26	E-ARAQ-53224-01	Spacer	2		
27		Hex. socket screw	8	M5XP0.8X25L	
28	E-ARAQ-53228-01	Stopper	2		
29	E-ARAK-53122-01	Sleeve	2		
30	L-0401-00115	Bearing	4	6913ZZ	BG-42
31		Hex. socket screw	8	M8XP1.25X35L	
32	E-ARAK-53121-01	Support	2		MPL-525
33	E-ARAK-53123-01	Spacer	2		
34		Hex. socket screw	4	M6XP1.0X20L	

18. Z-AXIS for 160” Bed Length

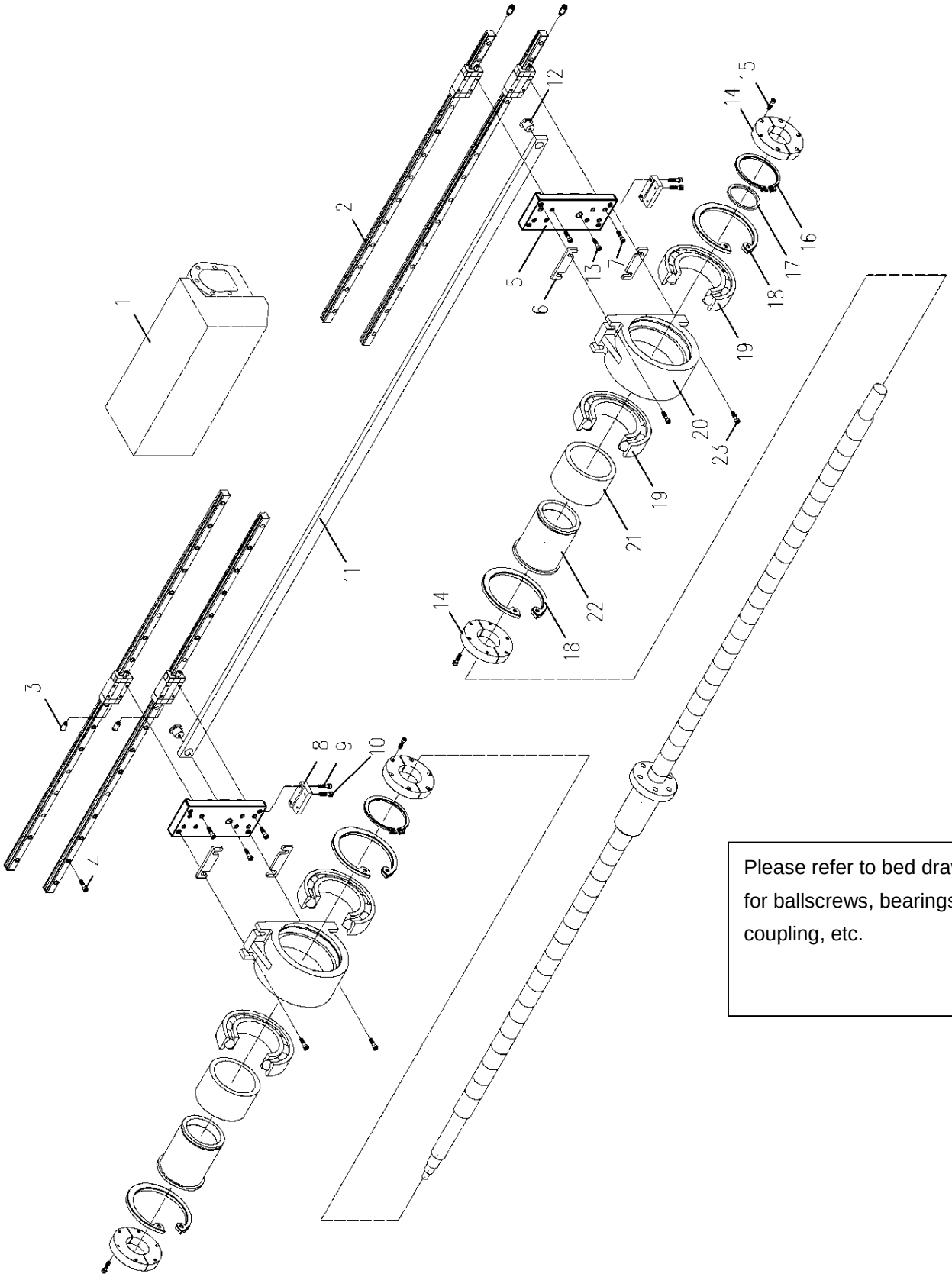

Please refer to bed drawings for ballscrews, bearings, coupling, etc.

Z-AXIS for 160” Bed Length

Item	Part no.	Description	Q'ty	Remark	Milltronics #
1	E-ARAK-53007-01	Nut seat	1		
2	E-ARAK-53202-01	Linear way	4	ABBA-BRS-20	
		Linear way block only			
3	E-ARAK-53130-01	Connector	4		
4		Hex. socket screw	128	M5XP0.8X20L	
5	E-ARAK-53207-01	Sliding plate	2		
6	E-ARAQ-53224-01	Spacer	4		
7		Hex. socket screw	16	M5XP0.8X16L	
8	E-ARAQ-53226-01	Adjusting plate	2		
9		Hex. socket screw	4	M6XP1.0X20L	
10		Hex. socket screw	4	M6XP1.0X20L	
11	E-ARAK-53131-01	Plate	1		
12	E-ARAQ-53428-01	Block	2		
13		Hex. socket screw	2	M8XP1.25X20L	
14	E-ARAK-53133-01	Ring	4		
15		Hex. socket screw	24	M5XP0.8X20L	
16		C snap	2	STW-65	
17	E-ARAK-53204-01	Ring	2		
18		C snap	4	RTW-90	
19	L-0401-00115	Bearing	4	6913ZZ	BG-24
20	E-ARAK-53121-01	Support	2		MPL-525
21	E-ARAK-53123-01	Spacer	2		
22	E-ARAK-53134-01	Sleeve	2		
23		Hex. socket screw	8	M8XP1.25X35L	

19. Manual Tailstock

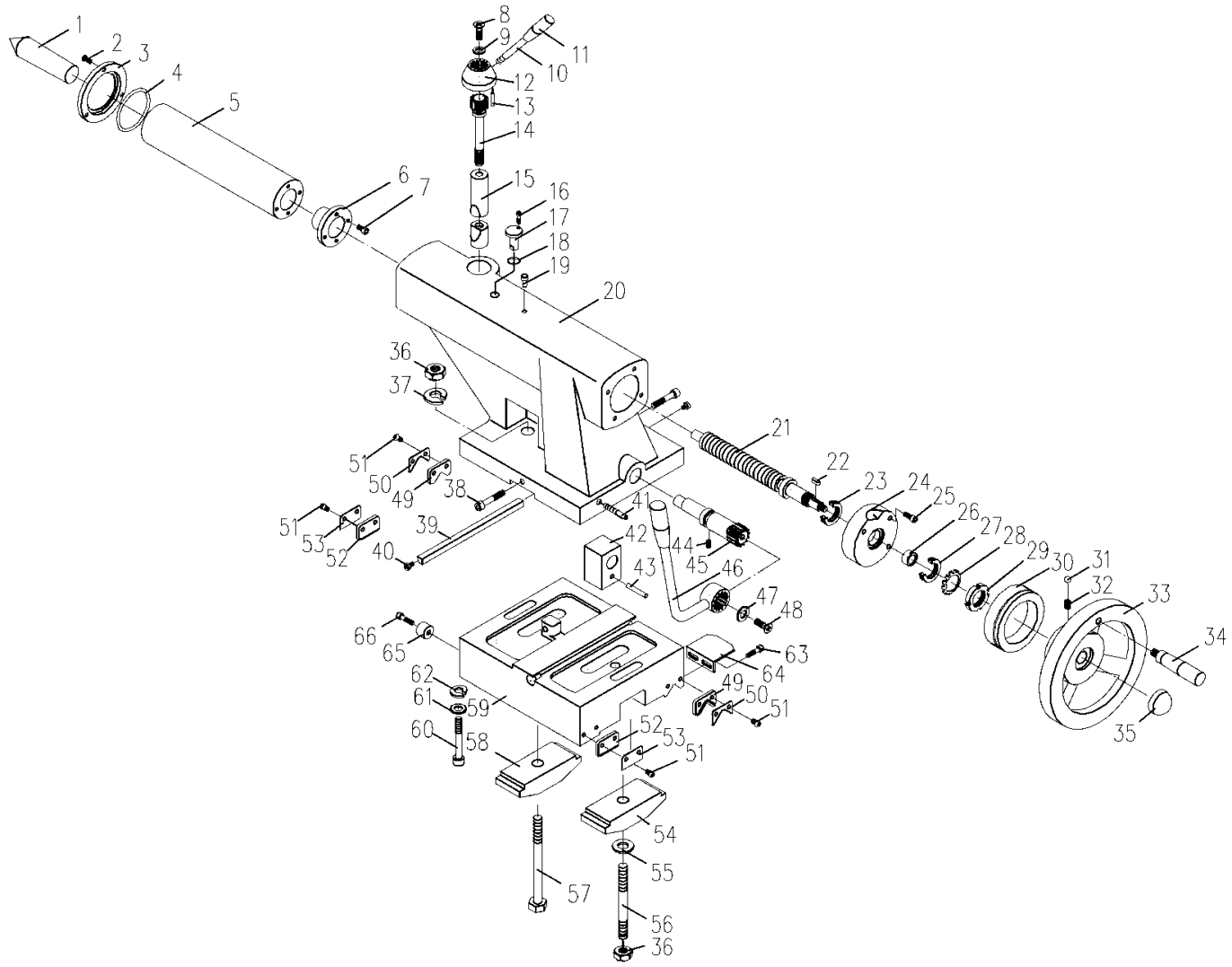

Manual Tailstock

Item	Part no.	Description	Q'ty	Remark	Milltronics #
1	L-2101-00003	Center		MT5	
2	5001-B06100015	Hex. socket screw	4	M6XP1.0X12L	
3	E-ARAK-60022-01	Front cover	1		
4		O ring	1	G-80	MLA-75
5	E-ARAK-60003-01	Quill	1		
6	E-ARAK-60006-01	Nut	1		MLA-200
7	5001-A06100015	Hex. socket screw	4	M6XP1.0X25L	
8	5007-B06100015	Flat screw	1	M6XP1.0X15L	MPL-859
9	E-ARAK-60014-01	Washer	1		MPL-860
10	E-ARAK-60021-01	Lever	1		MLA-81
11		Handle	1	M8	MLA-82
12	E-ARAK-60008-01	Lever seat	1		MLA-83
13	5105-A00004012	Spring pin	1	4X12L	
14	E-ARAK-60009-01	Bolt	1		MPL-861
15	E-ARAK-60010-01	block - clamp	1		MPL-862
16	5001-B05080012	Hex. socket screw	2	M5XP0.8X12L	
17	E-ARAK-60013-01	Key	1		
18		O ring	1	P-12	
19		Oil plug	1	1/4"	
20	E-ARAK-60001-01	Tailstock body	1		
21	E-ARAK-60007-01	Lead screw	1		
22	5121-C06006020	Key	1	6X6X20L	MLA-93
23		Bearing	1	51104	MLA-30
24	E-ARAK-60019-01	Indexing dial	1		MLA-95
25	5001-A08125016	Hex. socket screw	4	M8XP1.25X16L	MLA-96
26		Bearing	1	80B-2030	MLA-97
27		Bearing	1	51104	MLA-30
28	5087-A00000004	Washer	1	AW-04	MLA-99
29		Nut	1	AN-04	MLA-100
30	E-ARAK-60020-01	Dial	1		MLA-101
31		Steel ball	1	1/4"	MLA-102 / BG-18
32		Spring	1	ψ6Xψ8Xψ1X15L	MLA-103
33	E-ARAK-60005-01	Hand wheel	1		MLA-104
34		Knob	1	M10	MLA-105
35	5055-B00010175	Nut	1	M12	MLA-106
36	5051-B00020250	Nut	1	M20	MLA-106
37	5081-B00000020	Washer	1	M20	
38	5001-B08125055	Hex. socket screw	2	M8XP1.25X55L	
39	E-ARAK-60016-01	Gib	1		
40	E-ARAK-60023-01	Adjusting screw	2		
41	E-ARAK-60017-01	Bolt	1		

Item	Part no.	Description	Q'ty	Remark	Milltronics #
42	E-ARAK-60012-01	Block - adjusting	1		MLA-236
43	5105-A00004035	Spring pin	1	4X35L	MLA-237
44	5010-A08125016	Set screw	1	M8XP1.25X16L	MLA-96
45	E-ARAK-60015-01	Shaft	1		MLA-116
46	E-ARAK-60018-01	Lever	1		
47	E-ARAK-60028-01	Washer	1		
48	5007-B06100015	Flat screw	1	M6XP1.0X15L	
49	E-ARAK-60026-01	Wiper	2		
50	E-ARAK-60027-01	Wiper press plate	2		
51	5004-B05080012	Cap screw	8	M5XP0.8X12L	
52	E-ARAK-60024-01	Wiper	2		MLA-246
53	E-ARAK-60025-01	Wiper press plate	2		MLA-247
54	E-ARAK-60004-01	Clamp	1		
55	5071-B00000020	Washer	1	M20	
56	E-ARAK-60011-01	Bolt	1		MPL-912
57	5002-B20250205	Hex. Bolt	1	M20XP2.5X205L	MLA-127
58	E-ARAK-60029-03	Clamp	1		
59	E-ARAK-60002-01	Body base	1	ML22	
	E-ARAM-60001-01	Body base	1	ML26	
60	5001-A10150060	Hex. socket screw	1	M10XP1.5X60L	
61	5071-B00000010	Washer	2	M10	
62	5081-B00000010	Spring washer	2	M10	
63	5004-B06100012	Cap screw	2	M6XP1.0X12L	
64	E-ARAK-73021-01	Dog	1		
65	E-ARAK-60030-01	Stopper	1		
66	5001-B06100020	Hex. socket screw	1	M6XP1.0X12L	

20. Hydraulic Tailstock

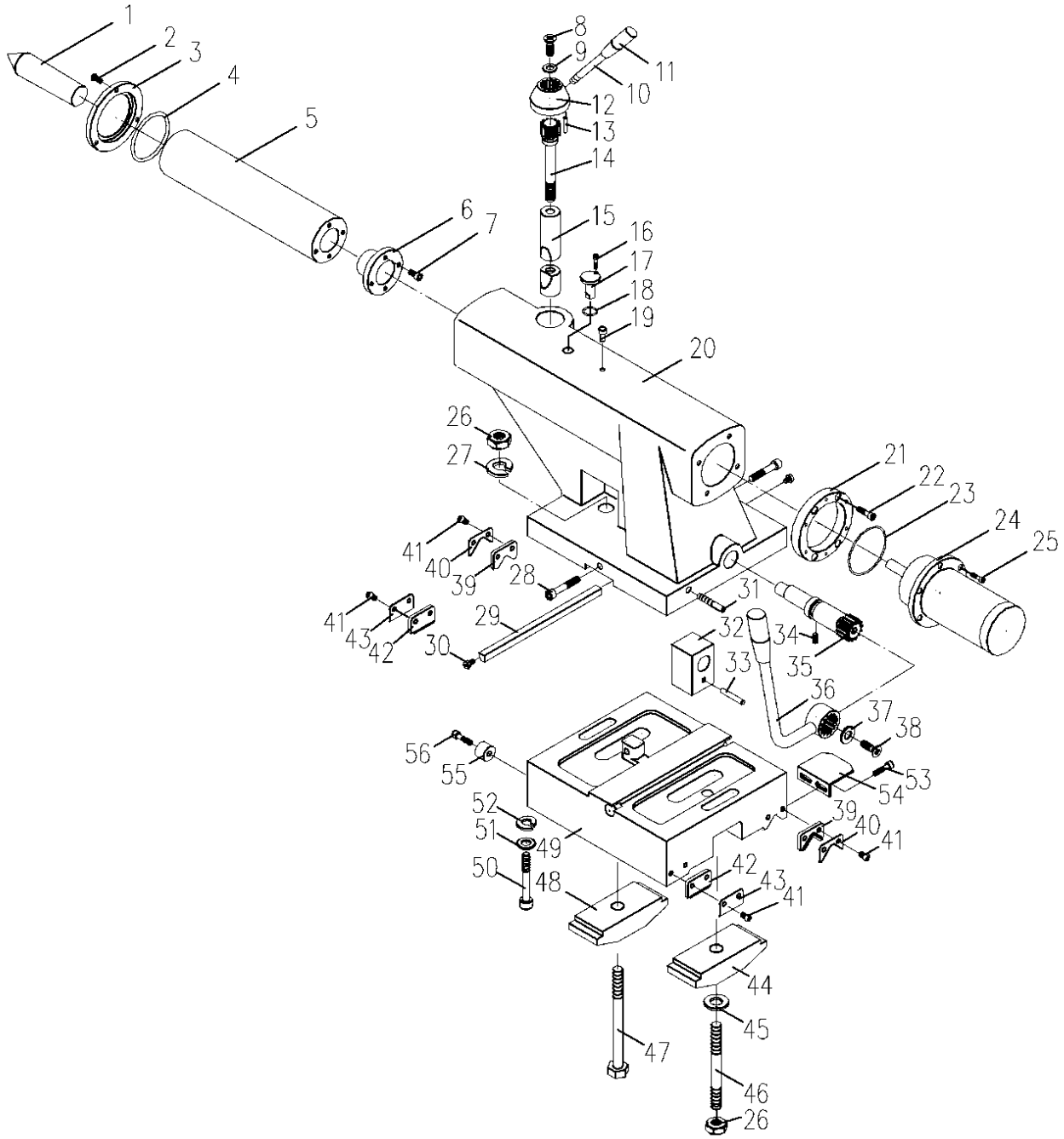

Hydraulic Tailstock

Item	Part no.	Description	Q'ty	Remark	Milltronics #
1	L-2101-00003	Center		MT5	
2	5001-B06100015	Hex. socket screw	4	M6XP1.0X12L	
3	E-ARAK-60022-01	Front cover	1		
4		O ring	1	G-80	MLA-75
5	E-ARAK-60003-01	Quill	1		
6	E-ARAK-60133-01	Connector plate	1		
7	5001-A06100015	Hex. socket screw	4	M6XP1.0X25L	
8	5007-B06100015	Flat screw	1	M6XP1.0X15L	
9	E-ARAK-60014-01	Washer	1		
10	E-ARAK-60021-01	Lever	1		
11		Handle	1	M8	
12	E-ARAK-60008-01	Lever seat	1		
13	5105-A00004012	Spring pin	1	4X12L	
14	E-ARAK-60009-01	Bolt	1		
15	E-ARAK-60010-01	block - clamp	1		
16	5001-B05080012	Hex. socket screw	2	M5XP0.8X12L	
17	E-ARAK-60013-01	Key	1		
18		O ring	1	P-12	
19		Oil plug	1	1/4"	
20	E-ARAK-60001-01	Tailstock body	1		
21	E-ARAK-60132-01	Indexing dial	1		
22	5001-A08125025	Hex. socket screw	4	M8XP1.25X25L	
23		O ring	1	G-90	
24	E-ARAK-60131-01	Cylinder	1		
25	5001-A06100025	Hex. socket screw	6	M6XP1.0X25L	
26	5051-B00020250	Nut	1	M20	
27	5081-B00000020	Washer	1	M20	
28	5001-B08125055	Hex. socket screw	2	M8XP1.25X55L	
29	E-ARAK-60016-01	Gib	1		
30	E-ARAK-60023-01	Adjusting screw	2		
31	E-ARAK-60017-01	Bolt	1		
32	E-ARAK-60012-01	Block - adjusting	1		
33	5105-A00004035	Spring pin	1	4X35L	
34	5010-A08125016	Set screw	1	M8XP1.25X16L	
35	E-ARAK-60015-01	Shaft	1		
36	E-ARAK-60018-01	Lever	1		
37	E-ARAK-60028-01	Washer	1		
38	5007-B06100015	Flat screw	1	M6XP1.0X15L	
39	E-ARAK-60026-01	Wiper	2		9800-132 *
40	E-ARAK-60027-01	Wiper press plate	2		9800-132 *
41	5004-B05080012	Cap screw	8	M5XP0.8X12L	

Item	Part no.	Description	Q'ty	Remark	Milltronics #
42	E-ARAK-60024-01	Wiper	2		9800-132 *
43	E-ARAK-60025-01	Wiper press plate	2		9800-132 *
44	E-ARAK-60004-01	Clamp	1		
45	5071-B00000020	Washer	1	M20	
46	E-ARAK-60011-01	Bolt	1		
47	5002-B20250205	Hex. Bolt	1	M20XP2.5X205L	
48	E-ARAK-60029-03	Clamp	1		
49	E-ARAK-60002-01	Body base	1	ML22	
	E-ARAM-60001-01	Body base	1	ML26	
50	5001-A10150060	Hex. socket screw	1	M10XP1.5X60L	
51	5071-B00000010	Washer	2	M10	
52	5081-B00000010	Spring washer	2	M10	
53	5004-B06100012	Cap screw	2	M6XP1.0X12L	
54	E-ARAK-73021-01	Dog	1		
55	E-ARAK-60030-01	Stopper	1		
56	5001-B06100020	Hex. socket screw	1	M6XP1.0X12L	

21. Guarding (40”, 60”, 80” Beds, New Style)

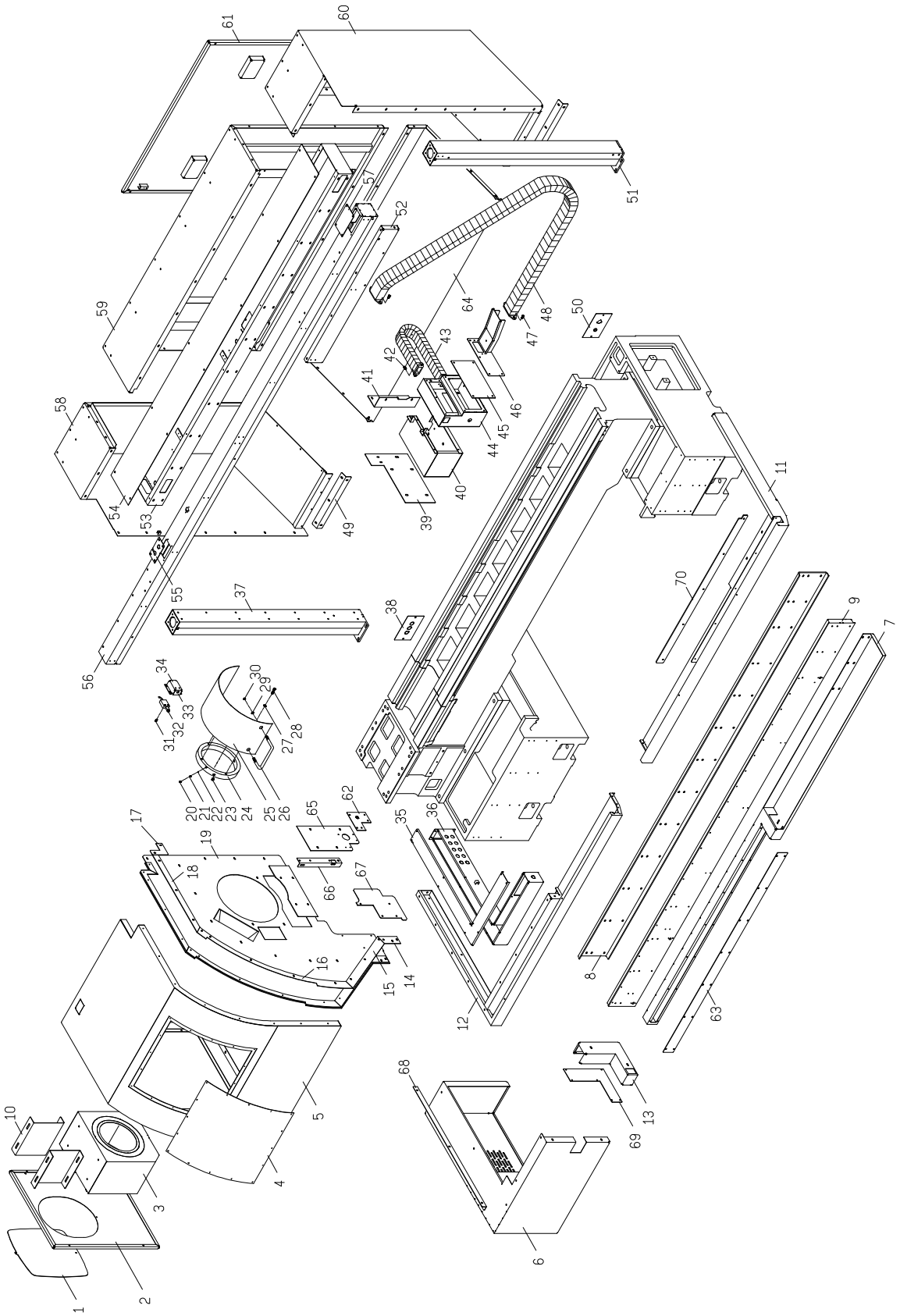

Guarding (40”, 60”, 80” Beds, New Style)

Item	Part no.	Description	Q'ty	Remark
1		Plate	1	
2		Side door cover	1	
3		Coolant collect	1	
4		Plate	1	
5	E-ARAK-70002-02	Left guard	1	
6		Cover-spindle motor	1	
7		Duct	1	ML-22/2640
		Duct	1	ML-22/2660
		Duct	1	ML-22/2680
8		Bracket	0	ML-22/2640
		Bracket	1	ML-22/2660
		Bracket	1	ML-22/2680
9		Fixing bracket	1	ML-22/2640
		Fixing bracket	1	ML-22/2660
		Fixing bracket	1	ML-22/2680
10		Fixing bracket	2	
11		Guide way bracket	1	ML-22/2640
		Guide way bracket	1	ML-22/2660
		Guide way bracket	1	ML-22/2680
12		Guide way bracket	1	ML-22/2640
		Guide way bracket	1	ML-22/2660
		Guide way bracket	1	ML-22/2680
13	E-ARAK-73010-02	Duct	1	
14		Press plate	1	
15		Press plate	1	
16		Press plate	1	
17		Press plate	1	
18		Press plate	1	
19	E-ARAK-70003-07	Side guard	1	ML-22
	E-ARAM-70003-01	Side guard	1	ML-26
20		Hex. screw socket	3	M8XP1.25X16L
21		Compress washer	3	6X12L
22		Steel ball	3	1/4”
23	E-ARAK-70041-01	Set screw	3	
24	E-ARAK-70033-01	Fix ring	1	
25	E-ARAK-70034-01	Chuck guard	1	A1-8(3” bore)
	E-ARAK-70066-01	Chuck guard	1	A1-11(4” bore)
	E-ARAK-70100-01	Chuck guard	1	A2-11(6” bore)
	E-ARAK-70153-01	Chuck guard	1	D1-8(3” bore)
	E-ARAK-70154-01	Chuck guard	1	D1-8(4” bore)
	E-ARAK-70155-01	Chuck guard	1	D1-11(6” bore)
26	E-ARAK-70069-01	Handle	1	
27		Spring washer	3	M8
28		Hex. socket screw	3	M8XP1.25X16L
29		Spring washer	2	M6
30		Nut	2	M6
31		Cap screw	2	M5XP0.8X20L
32		Limit switch	1	D4C-1202
33	E-ARAK-73012-01	Limit switch bracket	1	
34		Cap screw	4	M6XP1.0X12L
35		Cover	1	
36	E-ARAK-73020-01	Duct	1	

Item	Part no.	Description	Q'ty	Remark
37	E-ARAK-70006-01	Left bracket	1	
38	E-ARAK-73032-01	Cover	1	
39	E-ARAK-73025-01	Left cover	1	
40	E-ARAK-73024-01	Cover	1	
41	E-ARAK-73023-01	Rear cover	1	
42		Hex. socket screw	4	M6XP1.0X12L
43	E-ARAK-94011-02	Cable carrier	1	SQ301-II-R100-600L(No.11)
44	E-ARAK-73013-01	Box	1	
45	E-ARAK-73026-01	Cover	1	
46	E-ARAK-73014-01	Bracket	1	
47		Hex. socket screw	4	M6XP1.0X12L
48	E-ARAK-94013-01	Cable carrier (ML-22/2640)	1	SQ301-II-R250-1500L(No.8)
	E-ARAK-94021-01	Cable carrier (ML-22/2640)	1	SQ301-II-R250-1800L(No.8)
	E-ARAK-94026-02	Cable carrier (ML-22/2680)	1	SQ301-II-R250-2040L(No.8)
49		Bracket	1	
50	E-ARAK-70043-01	Side guard	1	
51	E-ARAK-70013-02	Right guard	1	
52		Top bracket	0	ML-22/2640
		Top bracket	1	ML-22/2660
		Top bracket	1	ML-22/2680
53		Top duct	1	ML-22/2640
		Top duct	1	ML-22/2660
		Top duct	1	ML-22/2680
54		cover	1	ML-22/2640
			1	ML-22/2660
			1	ML-22/2680
55		Plate	1	
56		Top bracket	1	ML-22/2640
		Top bracket	1	ML-22/2660
		Top bracket	1	ML-22/2680
57	E-ARAK-73011-01	Cover	1	
58	E-ARAK-70007-03	Rear left guard	1	
59		Rear top guard	1	ML-22/2640
		Rear top guard	1	ML-22/2660
		Rear top guard	1	ML-22/2680
60	E-ARAK-70012-02	Rear right guard	1	
61		Rear guard	1	
62		Cover	1	
63		Cover	1	ML-22/2640
		Cover	1	ML-22/2660
		Cover	1	ML-22/2680
64		Rear bottom guard	1	ML-22/2640
		Rear bottom guard	1	ML-22/2660
		Rear bottom guard	1	ML-22/2680
65		Plate	1	
66		Fixing bracket	1	
67		Plate	1	
68		Fixing bracket	1	
69		Plate	1	
70		Guide way bracket	1	ML-22/2640
		Guide way bracket	1	ML-22/2660
		Guide way bracket	1	ML-22/2680

22. Guarding (120”, 160” Beds, New Style)

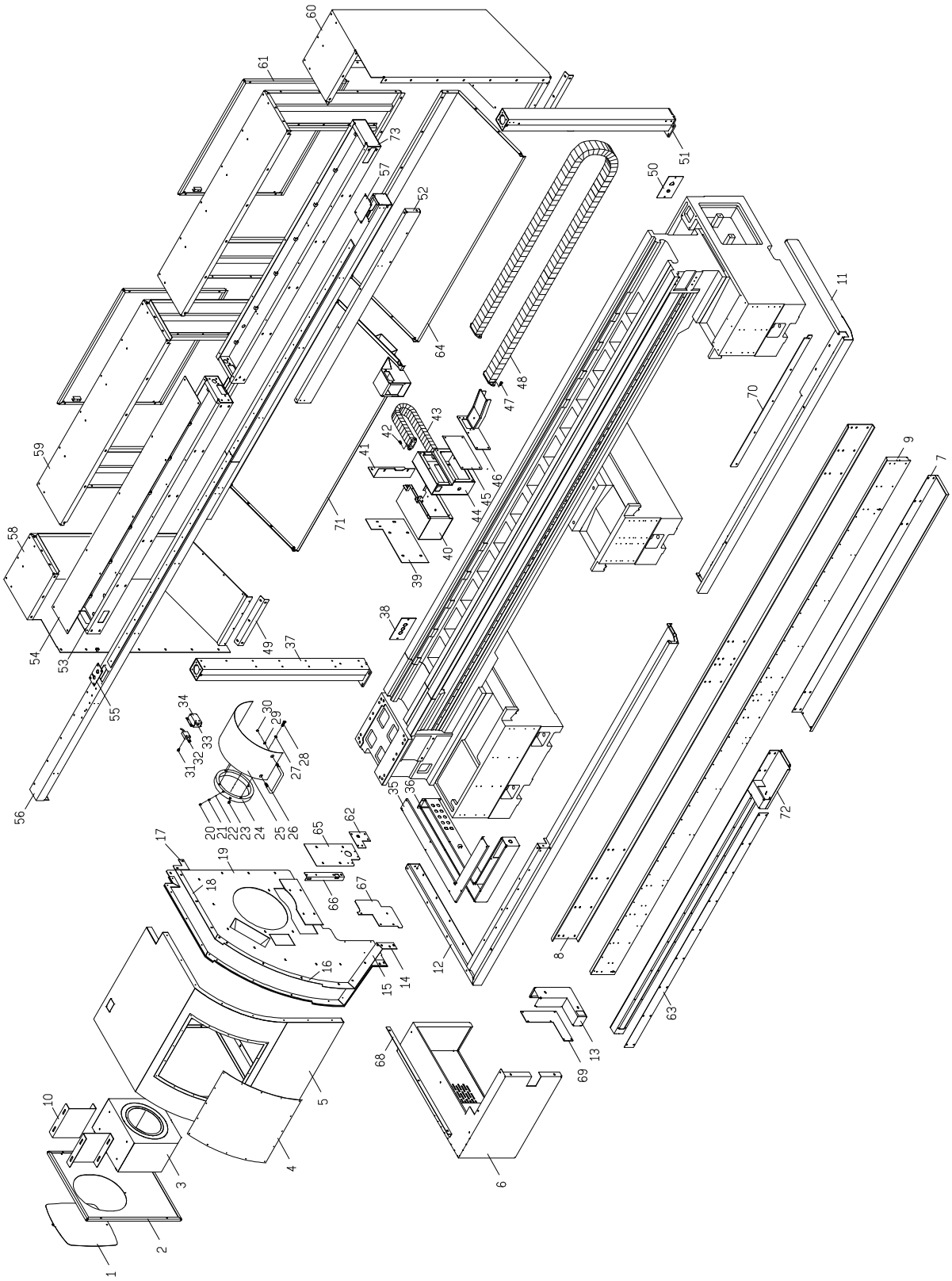

Guarding (120”, 160” Beds)

Item	Part no.	Description	Q'ty	Remark
1		Plate	1	
2		Side door cover	1	
3		Coolant collect	1	
4		Plate	1	
5	E-ARAK-70002-02	Left guard	1	
6		Cover-spindle motor	1	
7		Fixing bracket	1	ML-22/26120
		Fixing bracket	1	ML-22/26160
8		Bracket	1	ML-22/26120
		Bracket	1	ML-22/26160
9		Fixing bracket	1	ML-22/26120
		Fixing bracket	1	ML-22/26160
10		Fixing bracket	2	
11		Guide way bracket	1	ML-22/26120
		Guide way bracket	1	ML-22/26160
12		Guide way bracket	1	ML-22/26120
		Guide way bracket	1	ML-22/26160
13	E-ARAK-73010-02	Duct	1	
14		Press plate	1	
15		Press plate	1	
16		Press plate	1	
17		Press plate	1	
18		Press plate	1	
19	E-ARAK-70003-07	Side guard	1	ML-22
	E-ARAM-70003-01	Side guard	1	ML-26
20		Hex. screw socket	3	M8XP1.25X16L
21		Compress washer	3	ϕ 6X12L
22		Steel ball	3	1/4”
23	E-ARAK-70041-01	Set screw	3	
24	E-ARAK-70033-01	Fix ring	1	
25	E-ARAK-70034-01	Chuck guard	1	A1-8(3” bore)
	E-ARAK-70066-01	Chuck guard	1	A1-11(4” bore)
	E-ARAK-70100-01	Chuck guard	1	A2-11(6” bore)
	E-ARAK-70153-01	Chuck guard	1	D1-8(3” bore)
	E-ARAK-70154-01	Chuck guard	1	D1-8(4” bore)
	E-ARAK-70155-01	Chuck guard	1	D1-11(6” bore)
26	E-ARAK-70069-01	Handle	1	
27		Spring washer	3	M8
28		Hex. socket screw	3	M8XP1.25X16L
29		Spring washer	2	M6
30		Nut	2	M6
31		Cap screw	2	M5XP0.8X20L
32		Limit switch	1	D4C-1202
33	E-ARAK-73012-01	Limit switch bracket	1	
34		Cap screw	4	M6XP1.0X12L
35		Cover	1	
36	E-ARAK-73020-01	Duct	1	
37	E-ARAK-70006-01	Left bracket	1	
38	E-ARAK-73032-01	Cover	1	
39	E-ARAK-73025-01	Left cover	1	
40	E-ARAK-73024-01	Cover	1	
41	E-ARAK-73023-01	Rear cover	1	

Item	Part no.	Description	Q'ty	Remark
42		Hex. socket screw	4	M6XP1.0X12L
43	E-ARAK-94011-02	Cable carrier	1	SQ301-II-R100-600L(No.11)
44	E-ARAK-73013-01	Box	1	
45	E-ARAK-73026-01	Cover	1	
46	E-ARAK-73014-01	Bracket	1	
47		Hex. socket screw	4	M6XP1.0X12L
48	E-ARAK-94013-01	Cable carrier (ML-22/26120)	1	SQ301-II-R100-2100L(No.8)
	E-ARAK-94021-01	Cable carrier (ML-22/26160)	1	SQ301-II-R100-2800L(No.8)
49		Bracket	2	
50	E-ARAK-70043-01	Side guard	1	
51	E-ARAK-70013-02	Right guard	1	
52		Top bracket	1	ML-22/26120
		Top bracket	1	ML-22/26160
53		Top duct	1	ML-22/26120
		Top duct	1	ML-22/26160
54		cover	1	ML-22/26120
		cover	1	ML-22/26160
55		Plate	1	
56		Top bracket	1	ML-22/26120
		Top bracket	1	ML-22/26160
57	E-ARAK-73011-01	Cover	1	
58	E-ARAK-70007-03	Rear left guard	1	
59		Rear top guard	2	ML-22/26120
		Rear top guard	3	ML-22/26160
60	E-ARAK-70012-02	Rear right guard	1	
61		Rear guard	2	ML-22/26120
		Rear guard	3	ML-22/26160
62		Cover	1	
63		Cover	1	ML-22/26120
		Cover	1	ML-22/26160
64		Rear bottom guard	1	ML-22/26120
		Rear bottom guard	1	ML-22/26160
65		Plate	1	
66		Fixing bracket	1	
67		Plate	1	
68		Fixing bracket	1	
69		Plate	1	
70		Guide way bracket	1	ML-22/26120
		Guide way bracket	1	ML-22/26160
71		Rear bottom guard	1	ML-22/26120
		Rear bottom guard	1	ML-22/26160
72		Fixing bracket	1	ML-22/26120
		Fixing bracket	1	ML-22/26160
73		Top duct	1	ML-22/26120
		Top duct	1	ML-22/26160

23. Guarding – Doors (New Style)

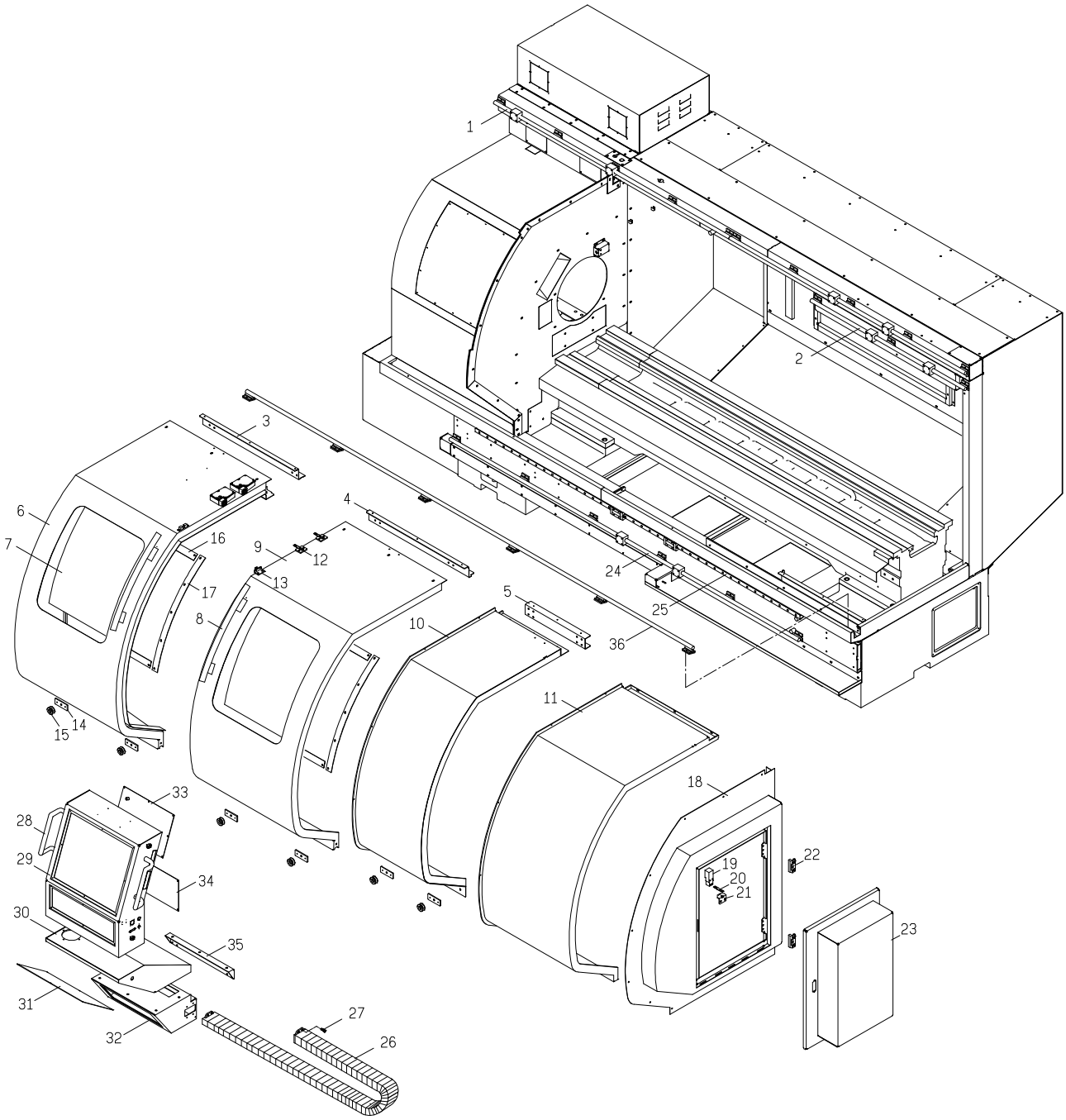

Guarding-Doors (New Style)

Item	Part no.	Description	Q'ty	Remark
1		Rod guide way (for 40” length)	1	LMC-C20-2980L
		Rod guide way (for 60” length)	2	LMC-C20-1740L
		Rod guide way (for 80” length)	2	LMC-C20-1990L
		Rod guide way (for 120” length)	2	LMC-C20-2490L
		Rod guide way (for 160” length)	2	LMC-C20-2990L
2		Rod guide way (for 40” length)	0	
		Rod guide way (for 60” length)	1	LMC-C20-1140L
		Rod guide way (for 80” length)	1	LMC-C20-1640L
		Rod guide way (for 120” length)	1	LMC-C20-2100L
		Rod guide way (for 160” length)	1	LMC-C20-2400L
3		Top bracket	1	
4		Top bracket	1	
5		Top bracket (for 40” length)	0	
		Top bracket (for 60” length)	1	
		Top bracket (for 80” length)	1	
		Top bracket (for 120” length)	1	
		Top bracket (for 160” length)	1	
6		Front door-left	1	
7	L-5904-00106	Glass	2	
8	L-5901-00009	Handle	2	
9		Front door-right	1	
10		Front door (for 40” length)	0	
		Front door (for 60” length)	1	
		Front door (for 80” length)	1	
		Front door (for 120” length)	1	
		Front door (for 160” length)	1	
11		Front door	1	
12		Fixing plate	2	
13		Door lock	1 set	
14		Fixing plate	6	
15		Wheel	6	
16		Press plate	4	
17		Press plate	4	
18		Side Guard	1	(option)
19		Limit switch	1	(option)
20		Pin	1	(option)
21		Bracket	1	(option)
22		Door hinge	2 set	(option)
23		Side cover	1	(option)
24		Rod guide way (for 40” length)	1	LMC-C20-1990L
		Rod guide way (for 60” length)	1	LMC-C20-2580L
		Rod guide way (for 80” length)	1	LMC-C20-2900L
		Rod guide way (for 120” length)	2	LMC-C20-2040L
		Rod guide way (for 160” length)	2	LMC-C20-2540L
25	E-ARJK-94001-01	Linear way (for 40” length)	1	BRS25B2-L1860-N-Z0-1
	E-ARJK-94002-01	Linear way (for 60” length)	1	BRS25B2-L2400-N-Z0-1
	E-ARAQ-94001-01	Linear way (for 80” length)	1	BRS25B2-L3000-N-Z0-1
	E-ARAQ-94002-01	Linear way (for 120” length)	1	BRS25B2-L4000-N-Z0-1
	E-ARAQ-94003-01	Linear way (for 160” length)	1	BRS25B2-L5000-N-Z0-1
26	E-ARAK-94012-01	Cable carrier (for 40” length)	1	SQ301-II-R100-600L(No.5)
	E-ARAK-94012-01	Cable carrier (for 60” length)	1	SQ301-II-R100-600L(No.5)
	E-ARAK-94027-01	Cable carrier (for 80” length)	1	SQ301-II-R100-210L(No.5)

Item	Part no.	Description	Q'ty	Remark
	E-ARAK-94030-01	Cable carrier (for 120” length)	1	SQ301-II-R100-2650L(No.5)
	E-ARAK-94017-02	Cable carrier (for 160” length)	1	SQ301-II-R100-3700L(No.5)
27		Hex. socket screw	4	M5XP0.8X12L
28	L-5901-00004	Handle	2	
29		Control box	1	
30		Box	1	
31		Cover	1	
32		Box	1	
33		Cover	1	
34		Cover	1	
35		Bracket	1	
36		Rod guide way (for 40” length)	1	LMC-C20-2800L
		Rod guide way (for 60” length)	1	LMC-C20-3300L
		Rod guide way (for 80” length)	2	LMC-C20-1990L
		Rod guide way (for 120” length)	2	LMC-C20-2490L
		Rod guide way (for 160” length)	2	LMC-C20-2990L
37		Limit switch	2 set	

Door wiper/brush
MPL-485

Blank Page

24. Operator Pendant & Guarding (120” - 160” Bed, Half-Guard)

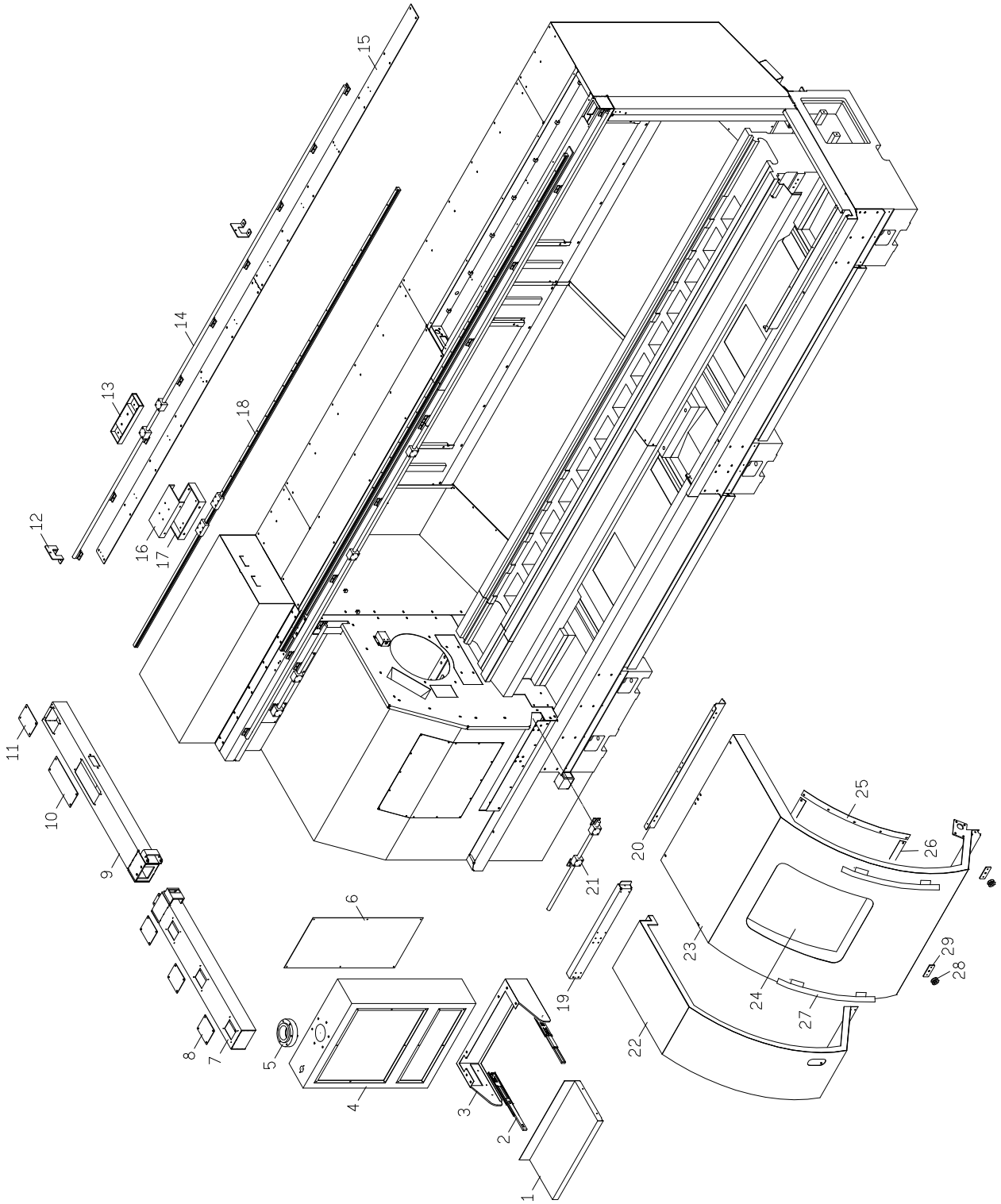

Operator Pendant & Guarding (for 120” - 160” Bed, Half-Guard)

Item	Part no.	Description	Q'ty	Remark
1		Drawer	1	
2		Sliding rail	2	
3		Fixing bracket	1	
4		Control box	1	
5		Rotation shaft	1	
6		Cover plate	1	
7		Arm	1	
8		Cover plate	3	
9		Arm	1	
10		Cover plate	1	
11		Cover plate	1	
12		Stand	2	
13		Slide seat	1	
14		Rod guide way (ML-22/26120)	1	LMC-C20-3750L
		Rod guide way (ML-22/26160)	2	LMC-C20-2360L
15		Connector panel (ML-22/26120)	2	
		Connector panel (ML-22/26160)	2	
16		Connector bracket	1	
17		Slide seat	1	
18	E-ARAQ-94002-01	Linear way (ML-22/26120)	1	BRS25B2-L4000-N-Z0-1
	E-ARAQ-94003-01	Linear way (ML-22/26160)	1	BRS25B2-L5000-N-Z0-1
19		Bracket	1	
20		Bracket	1	
21		Rod guide way	1	
22		Side door	1	
23		Door	1	
24	L-5904-00106	Glass	1	
25		Press plate	2	
26		Press plate	2	
27	L-5901-00009	Handle	2	
28		Wheel	2	
29		Fixing plate	2	

25. Guarding – (For Rear Chuck, Full Guard)

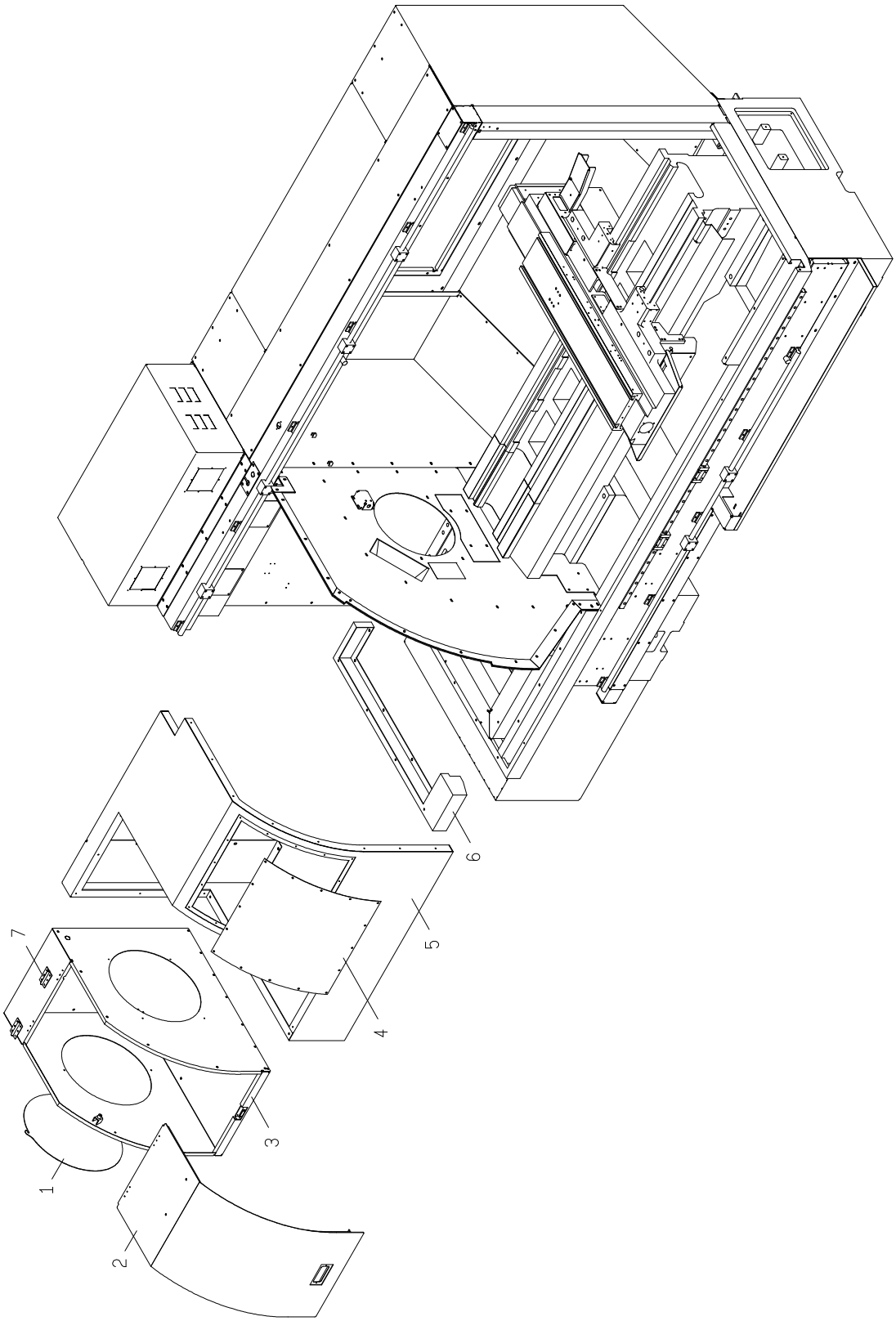

Guarding (Rear Chuck, Full Guard)

Item	Part no.	Description	Q'ty	Remark
1		Plate	1	
2		Side door cover	1	
3		Side guard	1	
4		Plate	1	
5		Left guard	1	
6		Fixing bracket	1	
7		Door hinge	2 set	

26. Guarding (Electrical Box)

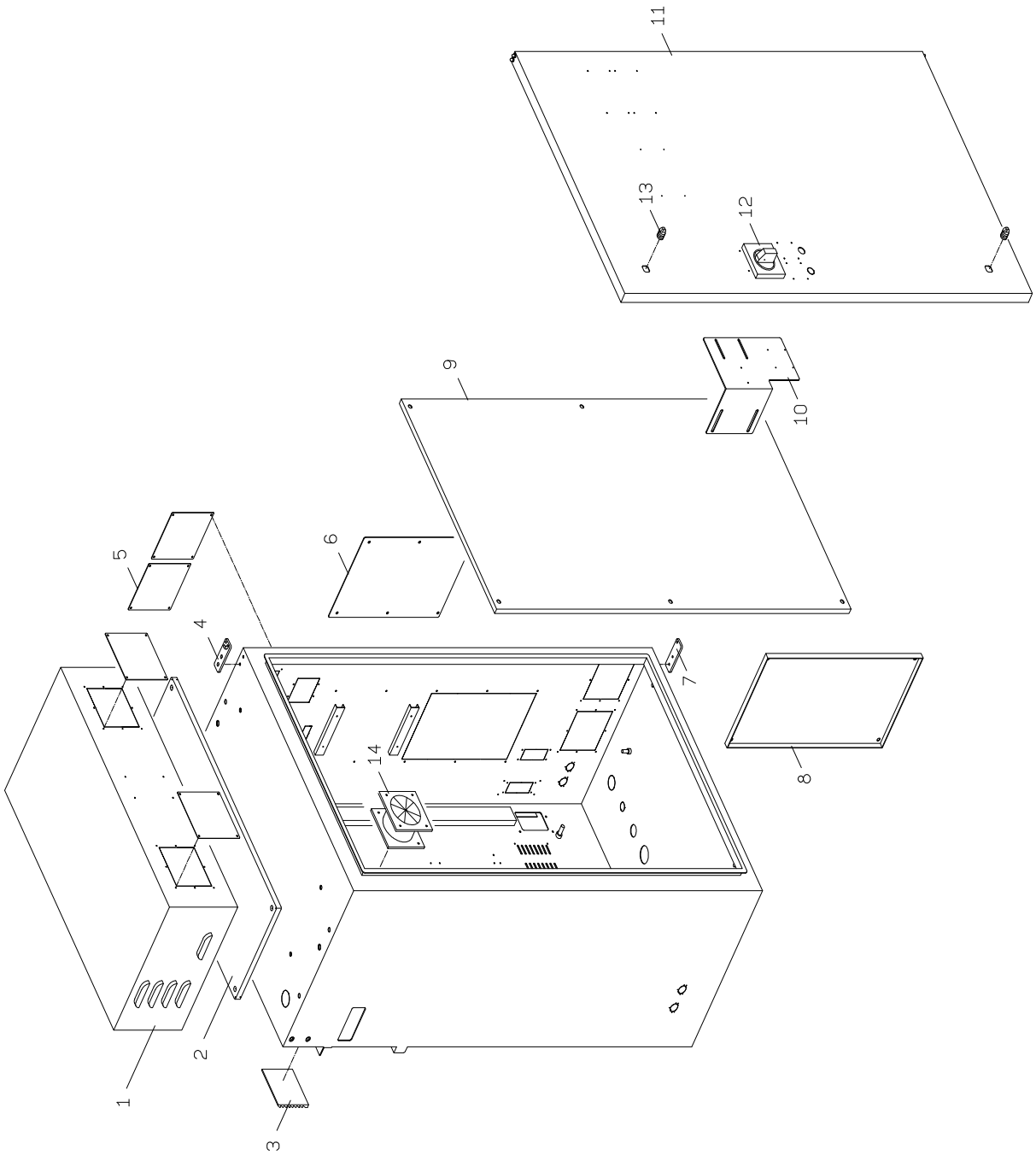

Guarding (Electrical Box)

Item	Part no.	Description	Q'ty	Remark	Milltronics #
1	E-ARAK-73022-01	Brake resistor cover	1		MM00083
2		Electrical panel	1		
3		Fan cover	2		
4		Plate	1		
5		Cover	6		
6		Cover	1		
7		Plate	1		
8	E-ARAK-73225-01	Electrical panel	1		
9		Electrical panel	1		
10		Bracket-main disconnect switch	1		
11		Door	1		
12		Main disconnect switch	1		SW00237
13		Latch	2		MLE0212

27. Steady Rest .75”-8” (option) 20-200mm

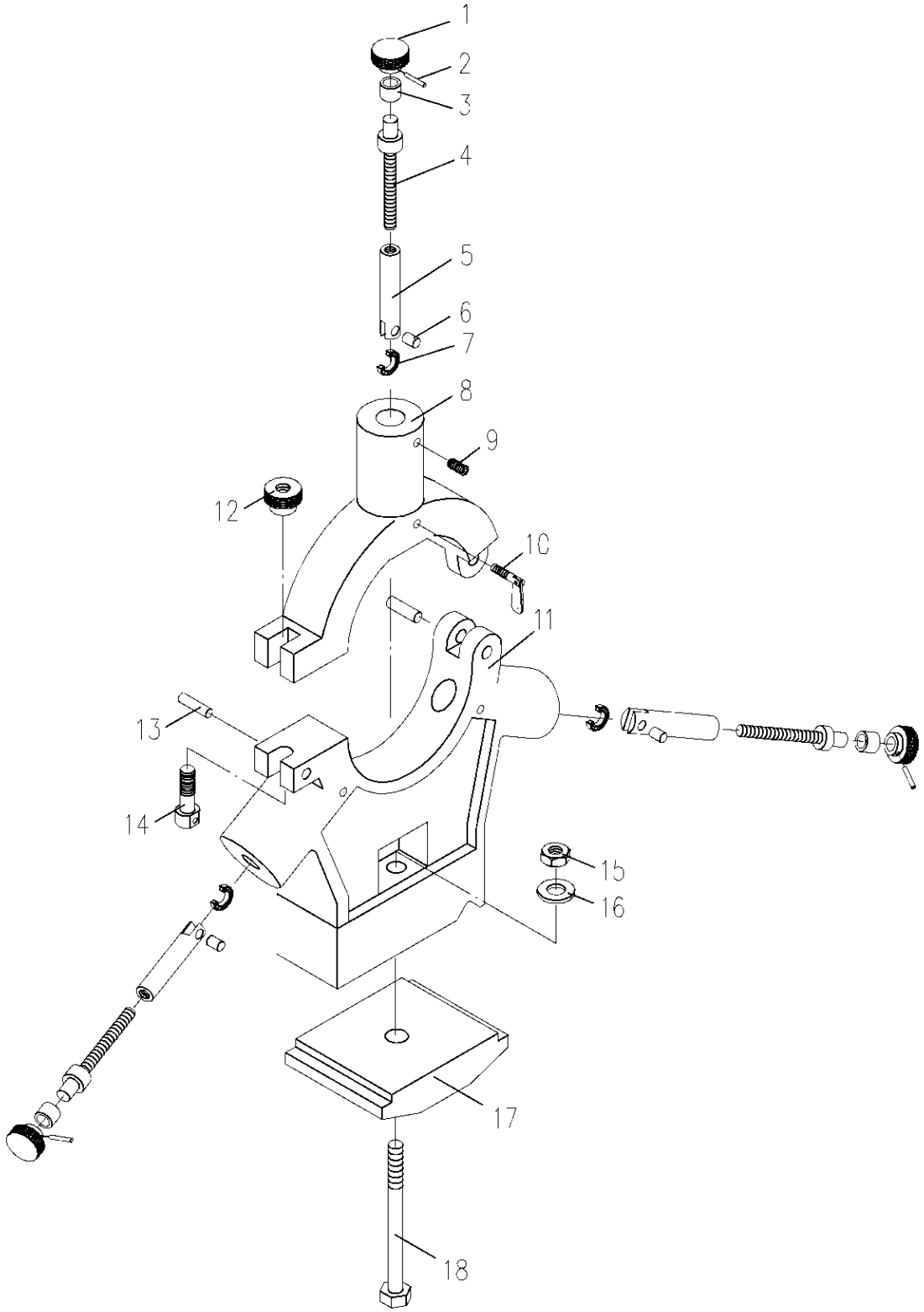

Steady Rest .75”–8” (option), 20-200mm

Item	Part no.	Description	Q'ty	Remark	Milltronics #
1	E-ARAK-85032-01	Plug	3		
2	5105-A00004030	Spring pin	3	Dia. 4 x 30L	
3	E-ARAK-85033-01	Bush	3		
4	E-ARAK-85034-01	Lead screw	3		
5	E-ARAK-85035-02	Shaft	3		
6	E-ARAK-85036-01	Pin	3		
7		Bearing	3	NAST-10x16mm	BG-121
		Bearing		NAST-10x12mm	BG-212
8	E-ARAK-85031-01	Upper body	1		
9	5010-A08125012	Set screw	3	M8XP1.25X12L	
10		Bolt	3	M8XP1.25X40L	
11	E-ARAK-85030-01	Lower body	1	ML-22	
	E-ARAM-85030-01	Lower body	1	ML-26	
12	E-ARAK-85037-01	Nut	1		
13	E-ARAK-85038-01	Pin	2		
14	E-ARAK-85039-01	Bolt	1		
15	5081-B00000020	Nut	1	M20	
16	5071-B00000020	Washer	1	M20	
17	E-ARAK-60029-01	Block clamp	1		
18	5002-B20250205	Hex. Bolt	1	M20XP2.5X205L	MLA-128

28. Steady Rest 6-12” (option) 150-300mm

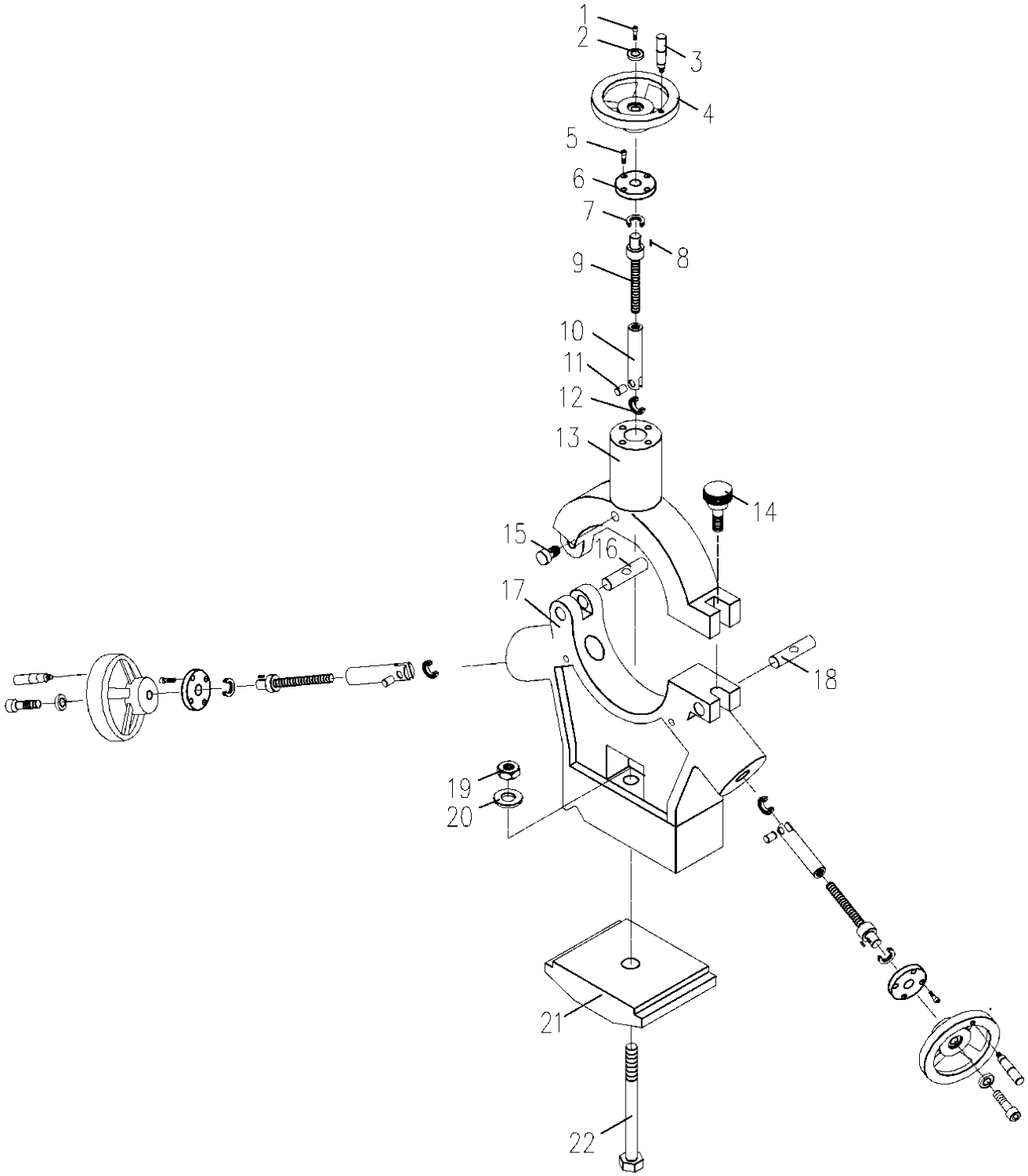

Steady Rest 6-12” (optional) 150-300mm

Item	Part no.	Description	Q'ty	Remark	Milltronics #
1	5001-B08125015	Hex. socket screw	3	M8XP1.25X15L	
2	5105-A00004030	Washer	3	M8	
3		Handle	3	M8	
4	E-ARAK-61023-01	Hand wheel	3		
5	5001-A06100025	Hex. socket screw	12	M6XP1.0X25L	
6	E-ARAK-61024-01	Cover	3		
7		Bearing	3	51104	BG-103
8	5121-C05005012	Key	3	5X5X12L	
9	E-ARAK-61025-01	Lead screw	3		
10	E-ARAK-61026-01	Shaft	3		
11	E-ARAK-61027-01	Pin	3		
12	ML22/26	Bearing	3	NAST-17x16mm	BG-124
	ML22 only	Bearing	3	NAST-17ZZx20mm	
	ML26 (180-410)	Bearing	3	NAST-30x20mm	MPL-574
	ML26 (180-410)	Bearing	3	NAST-30ZZx25mm	
13	E-ARAK-61022-01	Upper body	1		
14	E-ARAK-61034-01	Bolt	1		
15		Hex. socket screw	3	M10	
16	E-ARAK-61028-01	Pin	1		
17	E-ARAK-61021-01	Lower body	1		
18	E-ARAK-61029-01	Pin	1		
19	5081-B00000024	Nut	1	M20	
20	5071-B00000024	Washer	1	M20	
21	E-ARAK-60029-01	Block clamp	1		
22	5002-B20250205	Hex. Bolt	1	M20XP2.5X205L	MLA-128
* Items 1-7 available as assembly, MPL-816 for 180-410mm, and MPL-488 for 150-300mm.					

29. Follow Rest (Option)

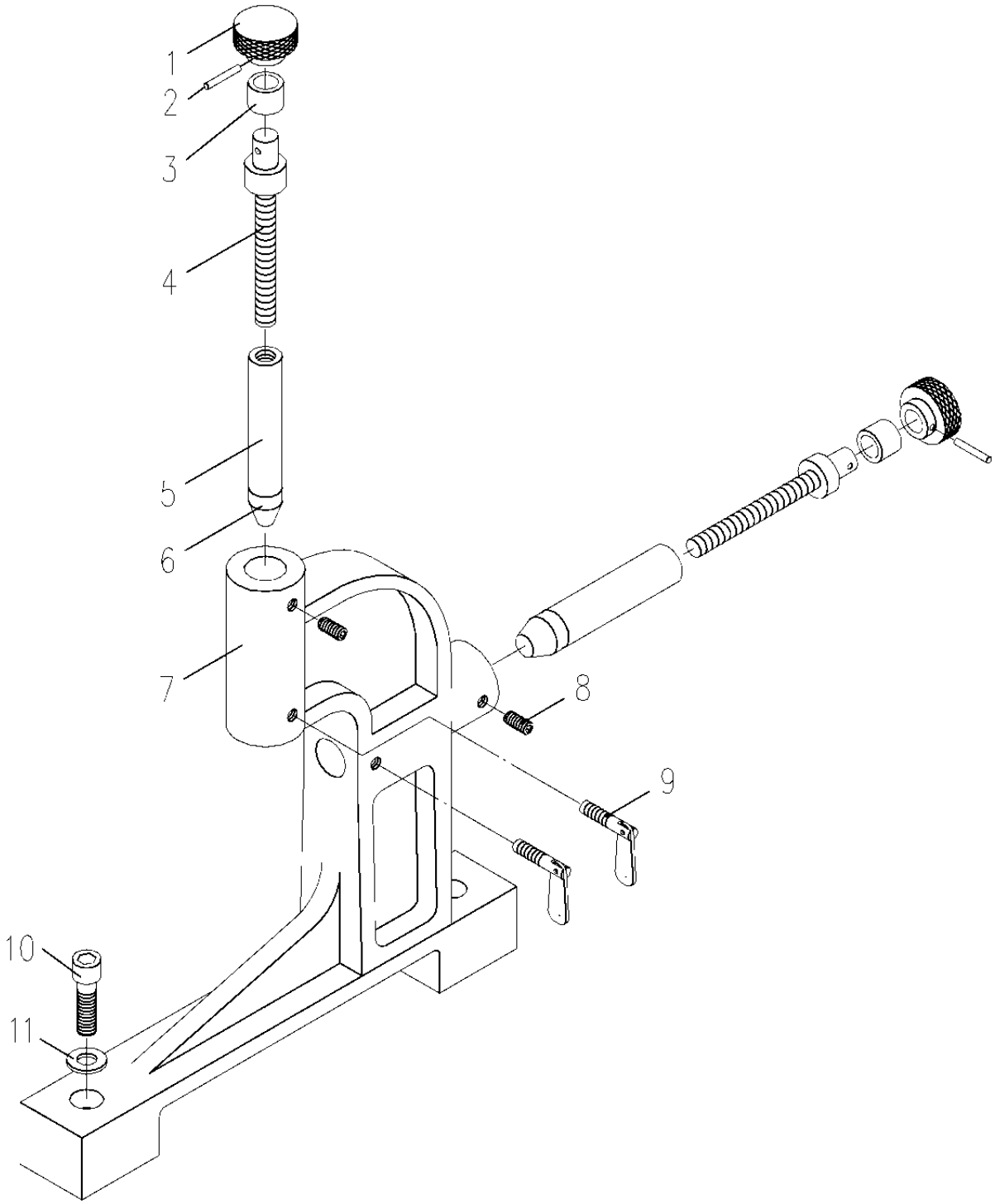

Follow Rest (Option)

Item	Part no.	Description	Q'ty	Remark	Milltronics #
1	E-ARAK-85032-01	Plug	2		
2	5105-A00004030	Spring pin	2	Dia. 4 x 30L	
3	E-ARAK-85033-01	Bush	2		
4	E-ARAK-85052-01	Lead screw	2		
5	E-ARAK-85053-01	Shaft	2		
6	E-ARAK-85054-01	Bronze jaw	2		MPL-353
7	E-ARAK-85050-01	Follow rest body	1	ML-22	MPL-165 (20-200mm)
	E-ARAM-85050-01	Follow rest body	1	ML-26	
8	5010-A08125012	Hex. Bolt	2	M8 x P1.25x12L	
9		Bolt	2	M8 x P1.25x40L	
10	5001-B12175055	Hex. bolt	2	M12xP1.75x55L	
11	5071-B00000012	Washer	2	M12xP1.75x55L	

30. Chip Conveyor (option)

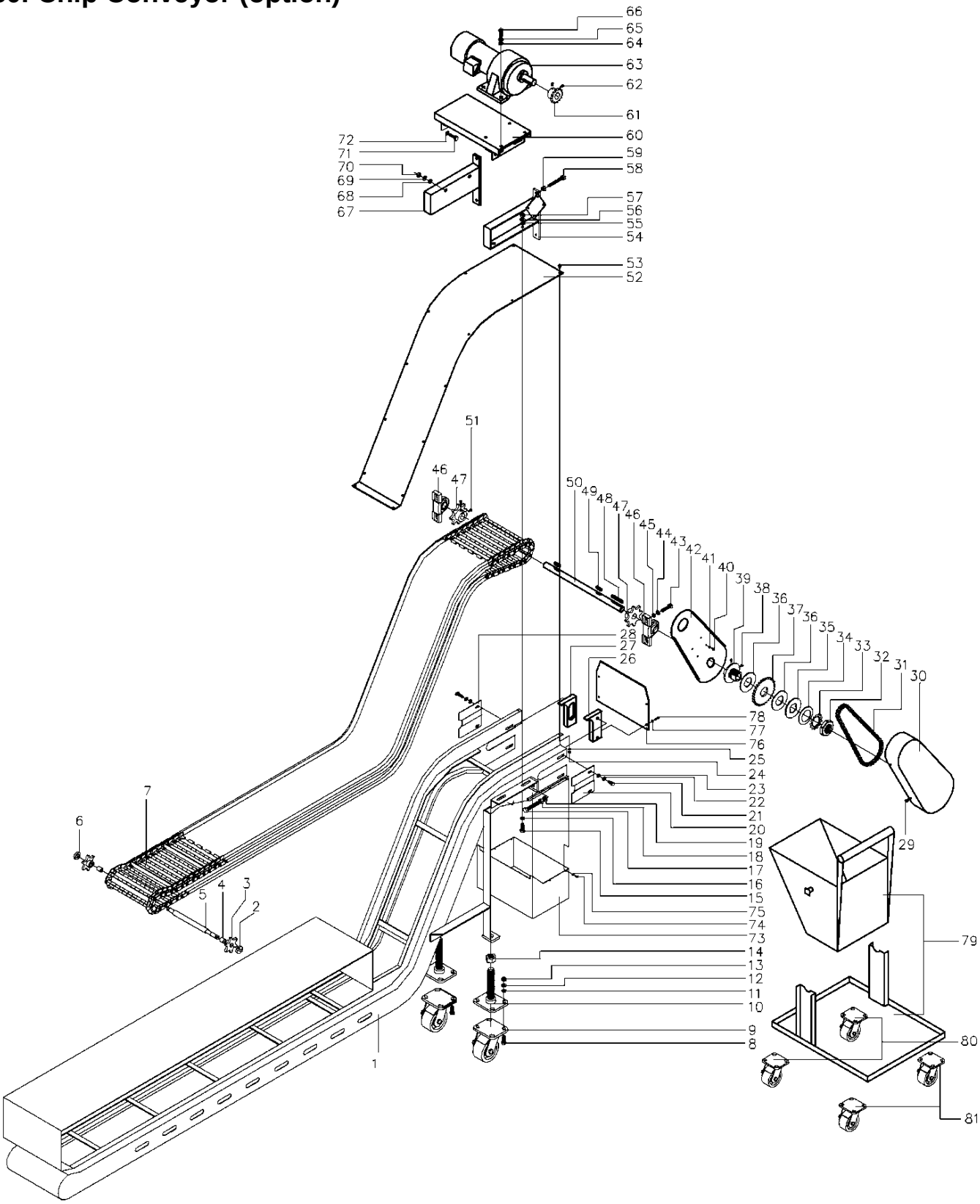

Chip Conveyor (option)

Item	Part no.	Description	Q'ty	Remark	Milltronics #
1		Frame body	1		
2	PB100152	Ring	1		
3	TA204006015	Spur gear	2		
4	BD101520	Bearing	2	CB1520	
5		Spindle	1	PB100232	
6	PB100151	Ring	1		
7		Hinge belt	1	PB100300	
8	CB10025AA	Hexagon bolt	8	M10 x P1.25 x 25L	
9	CW5140	PU wheel	2	4"	
10	PB100165	Adjust board	2		
11	BU110A	Washer	8	M10	
12	BU210A	Spring washer	8	M10	
13	CM10AA	Nut	8	M10	
14	CM24AA	Nut	2	M24	
15	CB10025AA	Hexagon bolt	4	M10 x P1.25 x 25L	
16	BU110A	Washer	4	M10	
17	CB12080AA	Hexagon bolt	2	M12 x P1.25 x 80L	
18	CM12AA	Washer	2	M12	
19	BU112A	Washer	2	M12	
20	PB200153	Left cover	1		
21	CB08016AA	Hexagon bolt	4	M8 x P1.0 x 16L	
22	BU208A	Spring washer	4	M8	
23	BU108A	Washer	4	M8	
24	CM05AA	Hexagon nut		M5 x P0.8	
25	BU205A	Spring washer		M5	
26	PB100155	Left aluminum base	1		
27	PB100156	Right aluminum base	1		
28	PB100154	Right cover	1		
29	CF0508A	Set screw	4	M5 x P0.8 x 8L	
30	PB100211	Motor cover	1		
31	CN04074A	Transmit chain	1	RS40	
32	PB100255	Nut	1		
33	PB100254	Washer	1		
34	PB100253	Spring washer	1		
35	PB100252	Washer	1		
36	ZV420894204	Brake	2		
37	TA50130042	Spur gear	1		
38	CC05006AA	Cap screw	2	M5 x P0.8 x 6L	
39	PB100251	Shaft body	1		

Item	Part no.	Description	Q'ty	Remark	Milltronics #
40	CF0508A	Set screw	4	M5 x P0.8 x 8L	
41	B0205A	Spring washer	4	M5	
42	PB100212	Motor cover	1		
43	CC10035AA	Cap screw	2	M10 x P1.25 x 35L	
44	BU110A	Spring washer	2	M10	
45	BU110A	Washer	2	M10	
46	BC01205	Bearing	2	UCP205	
47	TA104008025	Spur gear	2		
48	BK07060C	Flat key	1	7 x 7 x 60L	
49	BK07030C	Flat key	2	7 x 7 x 301	
50		Spindle	1	PB100231	
51	CF0610A	Set screw	2	M6 x P1.0 x 10L	
52		Cover	1		
53	CF0512A	Set screw		M5 x P0.8 x 12L	
54	PB100202	Adjust board	1		
55	BU110A	Washer	2	M10	
56	BU210A	Spring washer	2	M10	
57	CM10AA	Hexagon nut	2	M10	
58	CB10060AF	Hexagon bolt	2	M10 x P1.25 x 60L	
59	CM10AA	Hexagon nut	2	M10	
60		Adjust board	1	PB100201	
61	TA301015028	Spur gear	1		
62	CC06010AA	Cap screw	2	M6 x P1.0 x 10L	
63	EG1H020165S	Motor	1	1/4HP; 165:1	MO-239 – 1/2HP
64	BU110A	Washer	4	M10	
65	BU210A	Spring washer	4	M10	
66	CB10035AA	Hexagon bolt	4	M10 x P1.25 x 35L	
67	PB100203	Adjust board	1		
68	BU110A	Washer	4	M10	
69	BU210A	Spring washer	4	M10	
70	CM10AA	Hexagon nut	4	M10	
71	CB10025A	Hexagon bolt	4	M10 x P1.25 x 25L	
72	BU110A	Washer	4	M10	
73		Hopper	1	PB100172	
74	CF0508A	Set screw	4	M5 x P0.8 x 8L	
75	BU205A	Spring washer	4	M5	
76		Cover	1	PB100163	
77	BU205A	Spring washer	4	M5	
78	CF0508A	Set screw	4	M5 x P0.8 x 8L	

31. Waylube Pump MA00458

The on time and off time can be adjusted using MISC control parameters “Way Lube ON time (sec)”, and “Way Lube OFF time (min)”.

Oiler Comparison

	Old style	**New style**
Model #	CESD	CEN01
Part #	MA00219	MA00458
Timer function ON/OFF	Built-in controls	Via CNC #66
Audible alarm	YES	NO
Oil pressure gauge	NO	YES
Manual override button	YES	YES

Software & control

All 8200 versions have the functionality. 7200 version 77401 or higher is required to have the functionality.

The oiler timer is functional only when the “Grease Cycle Time” parameter is set to Zero, and the Way Lube ON and OFF time parameters are non-zero.
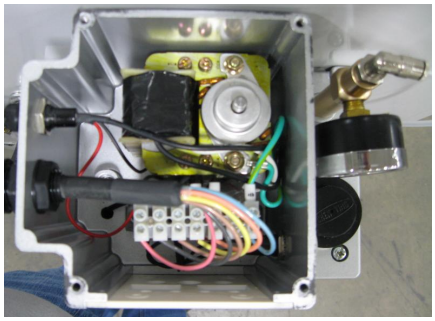
Pictures of MA00458