MILLTRONICS
CNC MACHINES

TT80B Mechanical

7-5-2011
Rev 1

Table Of Contents

Manual Discrepancy Sheet 1
Base Assembly 2
Bridge Assembly 4
Table Assembly 6
Head Assembly 8
Z Axis Assembly (for belt drive) 10
Z Axis Assembly (for inline spindle models) 12
Power Drawbar Cylinder Assembly (for inline spindle models) 14
Power Drawbar Cylinder Assembly (for belt drive) 16
Coolant Trough Assembly (BR50) 17
Coolant Trough Assembly With Auger 18
Leveling Instructions For BR 50 20
Leveling Instructions For BR 60 & 80 22
Machine Lubrication Instructions 24
Retention Knob Chart 26
Air Filter / Regulator / Lubricator Assembly 27
BR60/80 Lift Off Door Assembly – Operator Side 28
Incomplete drawings at time of printing: 29
- BR60/80-100” Auger Trough Assembly 29
- BR60/80-150” Auger Trough Assembly 29
- BR60-100” Enclosure Assembly – ATC Side 29
- BR60-100” Enclosure Assembly - Operator Side 29
- BR80-150” Enclosure Assembly – ATC Side 29
- BR80-150” Enclosure Assembly – Operator Side 29
- BR60-150” Enclosure Assembly – ATC Side 29
- BR60-150” Enclosure Assembly - Operator Side 29
- BR80-100” Enclosure Assembly – ATC Side 29
- BR80-100” Enclosure Assembly – Operator Side 29

Manual Discrepancy Sheet

1. On pages 3 and 7 quantities of some items have been modified from the original drawing.

Base Assembly

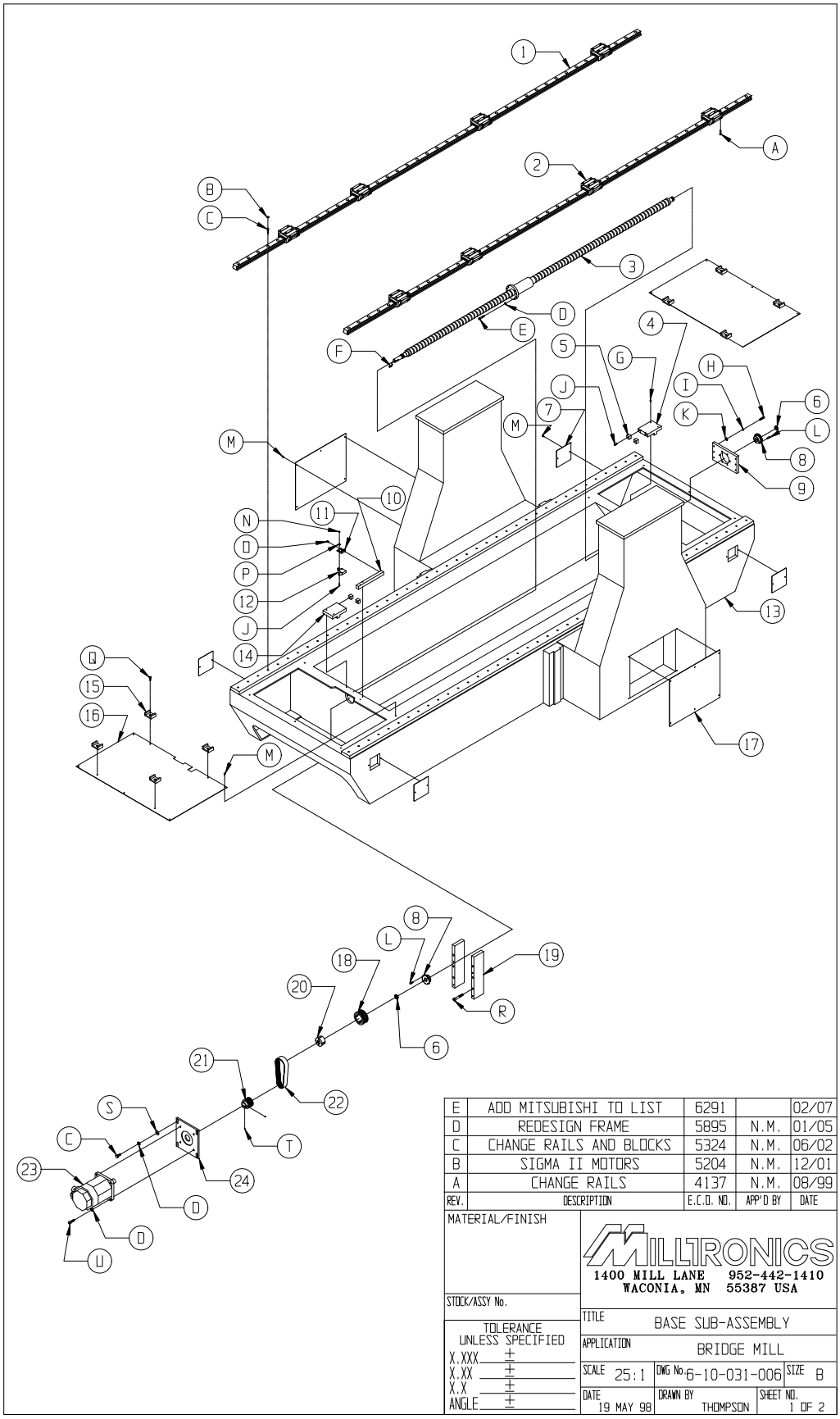

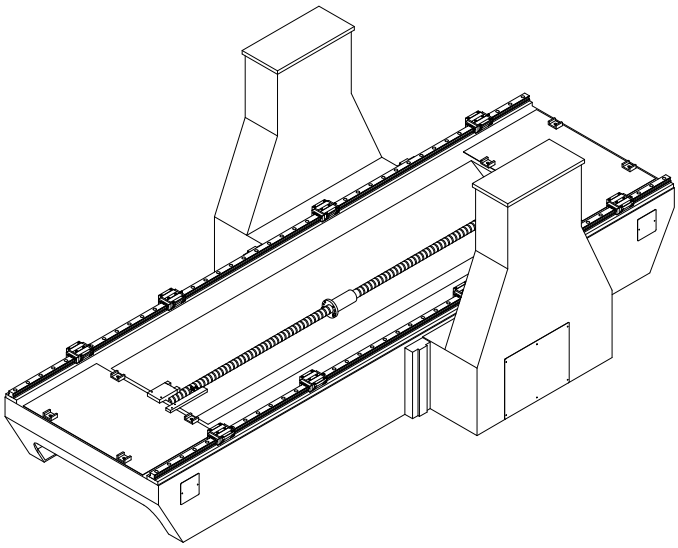

PARTS LIST			
No.	QTY	STOCK No.	DESCRIPTION
1	2	SEE TABLE	X-AXIS RAILS
* 2	14	SEE TABLE	45 mm RAIL BLOCK
3	2	SEE TABLE	X-AXIS BALL SCREW
4	2	SEE TABLE	X-AXIS HARD STOP BLOCK
5	8	MP-718	POM HARD STOP BUMPER
6	4	SEE TABLE	BEARING LOCK NUT
7	4		SMALL SIDE COVER
8	4	SEE TABLE	BEARING CUP ASSEMBLY
9	2		X-AXIS RADIAL SUPPORT PLATE
10	2	BR-154	X-AXIS SWITCH MOUNTING BAR
11	2	MP1-387	X-AXIS SWITCH BRACKET
12	2	SW-193	SWITCH
13	1		MACHINE BASE
14	2	SEE TABLE	X-AXIS HARD STOP BLOCK
15	8		X-AXIS COVER BAR SUPPORT
16	2		MOTOR ASSEMBLY COVER
17	1		COLUMN ACCESS COVER
18	2	PY-231	X-AXIS PULLEY
19	4		X-AXIS MOTOR SPACER PLATE
20	2	PY-232	X-AXIS BUSHING
21	2	SEE TABLE	MOTOR PULLEY
22	2	BT-102	720-8M-30 BELT
23	2	SEE TABLE	AXIS MOTOR
24	2		X-AXIS MOTOR PLATE

HARDWARE LIST		
No.	QTY	DESCRIPTION
A	32	3/8-16 x 1 1/2 SHCS
B	82	RAIL PLUG (100")
	134	RAIL PLUG (150")
C	86	1/2-13 x 1 1/2 SHCS (100")
	138	1/2-13 x 1 1/2 SHCS (150")
D	16	1/2 LOCK WASHER
E	8	1/2-13 x 1 3/4 SHCS
F	1	10mm x 10mm x 30mm KEY
G	4	5/16-18 x 1 1/2 SHCS
H	6	3/8-16 x 1 1/4 SHCS
I	6	3/8 LOCK WASHER
J	6	M5-.8 x 20mm SHCS
K	6	3/8 FLAT WASHER
L	12	5/16-18 x 2 SHCS
M	30	1/4-20 x 1/2 BHCS
N	2	M5-.8 HEX NUT
O	2	M5-.8 x 12mm BHCS
P	2	M5 FLAT WASHER
Q	8	1/4-20 x 3/4 FHCS
R	4	1/2-13 x 3 3/4 SHCS
S	4	1/2 FLAT WASHER
T	2	1/4-20 x 1/4 SHSS
U	4	1/2-13 x 1 1/4 SHCS

MOTOR & PULLEY TABLE				
No.	YASKAWA	FANUC	SIEMENS	MITSUBISHI
21	PY-233	PY-233	PY-240	PY-233
23	MO-144 (2Kw)	30Nm A06B-0253-B200	18Nm 1FK7100-5AF71	MO-185 (3.5Kw)
	MO-146 (3Kw)		27Nm 1FK7101-5AF71	MO-187 (5Kw)
	MO-129 (4.4Kw)			

TRAVEL TABLE		
No.	DESCRIPTION	
1	BALL RAIL	MPB-63
	ROLLER RAIL	N/A
* 2	BALL RAIL BLOCK	MP-728
	ROLLER RAIL BLOCK	N/A
3	BALL SCREW	MPB-66
4	HARD STOP BLOCK	BR-157
6	BEARING LOCKNUT	MPB-56
8	BEARING CUP ASSEMBLY	BG-95
14	HARD STOP BLOCK	BR-156

* 12 required

REV.	DESCRIPTION	E.C.O. NO.	APP'D BY	DATE
E	ADD MITSUBISHI TO LIST	6291		02/07
D	REDESIGN FRAME	5895	N.M.	01/05
C	CHANGE RAILS AND BLOCKS	5324	N.M.	06/02
B	SIGMA II MOTORS	5204	N.M.	12/01
A	CHANGE RAILS	4137	N.M.	08/99

MATERIAL/FINISH

STOCK/ASSY No.

TOLERANCE UNLESS SPECIFIED
X.XXX ±
X.XX ±
X.X ±
ANGLE ±

MILLTRONICS
1400 MILL LANE 952-442-1410
WACONIA, MN 55387 USA

TITLE: BASE SUB-ASSEMBLY
APPLICATION: BRIDGE MILL
SCALE: 25:1 | DWG No. 6-10-031-006 | SIZE: B
DATE: 19 MAY 98 | DRAWN BY: THOMPSON | SHEET NO. 2 OF 2

Bridge Assembly

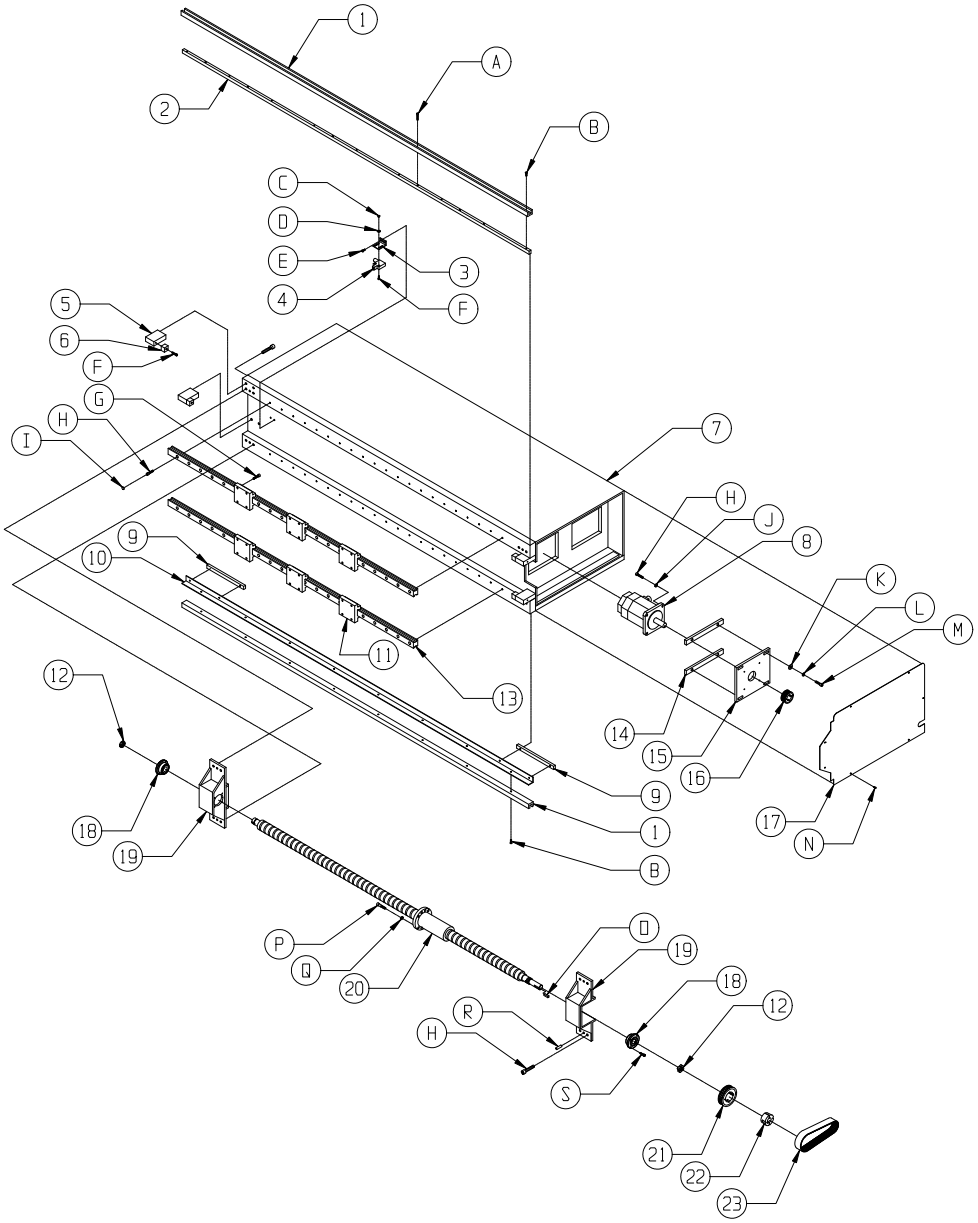

REV.	DESCRIPTION	E.C.O. NO.	APP'D BY	DATE
E	ADD MITSUBISHI TO LIST	6292		02/07
D	REDESIGN FRAME	5896	N.M.	01/05
C	CHANGE RAILS AND BLOCKS	5325	N.M.	06/02
B	SIGMA II MOTORS	5202	N.M.	12/01
A	CHANGE RAILS	4138	N.M.	08/99

MATERIAL/FINISH

STOCK/ASSY No.

TOLERANCE UNLESS SPECIFIED
X.XXX ±
X.XX ±
X.X ±
ANGLE ±

MILLTRONICS
1400 MILL LANE 952-442-1410
WACONIA, MN 55387 USA

TITLE BRIDGE SUB-ASSEMBLY
APPLICATION BRIDGE MILL
SCALE 20:1 | DWG No. 6-10-031-004 | SIZE B
DATE 15 JUN 98 | DRAWN BY THOMPSON | SHEET NO. 1 OF 2

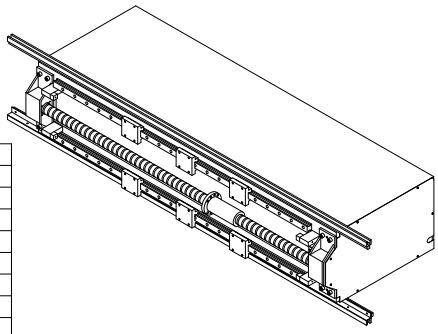

PARTS LIST			
No.	QTY	STOCK No.	DESCRIPTION
1	2		Y WAY COVER RIDER
2	1		Y WAY COVER RIDER SPACER BAR
3	1	MP1-387	Y SWITCH BRACKET
4	1	SW-193	LIMIT SWITCH
5	4		HARDSTOP BLOCK
6	4	MP-718	POM HARD STOP BUMPER
7	1		BRIDGE ASSEMBLY
8	1	SEE TABLE	AXIS MOTOR
9	2		Y WAY COVER RIDER SPACER - LOWER
10	1		Y WAY COVER RIDER BRACKET - LOWER
11	6	SEE TABLE	45mm RAIL BLOCK
12	2	MP-439	BEARING LOCKNUT
13	2	SEE TABLE	Y-AXIS RAIL
14	2		Y MOTOR PLATE SPACER
15	1		Y MOTOR PLATE
16	1	SEE TABLE	MOTOR PULLEY
17	1		Y BELT & PULLEY COVER
18	2	BG-96	BALL SCREW SUPPORT
19	2		Y BEARING HOUSING
20	1	SEE TABLE	Y BALL SCREW
21	1	PY-234	TL48-8m-30 PULLEY 2012
22	1	PY-235	19mm I.D. 2012 BUSHING
23	1	BT-102	720-8M-30

MOTOR & PULLEY TABLE				
No.	YASKAWA	FANUC	SIEMENS	MITSUBISHI
8	MO-144 (2kw)	22Nm A06B-0247-B200	18Nm 1FK7100-5AF71	MO-185 (3.5Kw)
	MO-146 (3Kw)			MO-187 (5Kw)
	MO-129 (4.4Kw)			
16	PY-233	PY-233	PY-240	PY-233

RAIL, BLOCK AND BALL SCREW TABLE				
ITEM	DESCRIPTION	50"	60"	80"
11	BALL RAIL BLOCK	MP-728	MP-728	MP-728
	ROLLER RAIL BLOCK	MP-819	MP-819	MP-819
13	BALL RAIL	MPB-59	MPB-60	MPB-61
	ROLLER RAIL	MPB-72	MPB-73	MPB-74
20	BALL SCREW	MPB-67	MPB-68	MPB-69

HARDWARE LIST		
No.	QTY	DESCRIPTION
A	4	1/4-20 x 3/4 SHCS
B	18	1/4-20 x 1 1/2 FHCS
C	2	M5-.8 HEX NUT
D	2	M5 FLAT WASHER
E	2	M4-.7 x 12mm BHCS
F	6	M5-.8 x 16mm SHCS
G	28	3/8-16 x 1 1/4 SHCS
H	38	1/2-13 x 1 1/2 SHCS (50") MPB-59
	44	1/2-13 x 1 1/2 SHCS (60") MPB-60
	52	1/2-13 x 1 1/2 SHCS (80") MPB-61
	70	1/2-13 x 1 1/2 SHCS (50") MPB-72
	82	1/2-13 x 1 1/2 SHCS (60") MPB-73
	98	1/2-13 x 1 1/2 SHCS (80") MPB-74
I	34	RAIL PLUG (50") MPB-59
	40	RAIL PLUG (60") MPB-60
	48	RAIL PLUG (80") MPB-61
	66	RAIL PLUG (50") MPB-72
	78	RAIL PLUG (60") MPB-73
	94	RAIL PLUG (80") MPB-74
J	4	1/2 LOCK WASHER
K	4	3/8 FLAT WASHER
L	4	3/8 LOCK WASHER
M	4	3/8-16 x 1 1/2 SHCS
N	7	10-32 x 3/8 BHCS
O	1	5mm x 5mm x 20mm KEY
P	8	5/16-18 x 1 1/4 SHCS
Q	8	5/16 LOCK WASHER
R	4	3/8 x 1 1/2 DOWEL PIN
S	8	1/4-20 x 1 SHCS

REV.	DESCRIPTION	E.C.O. NO.	APP'D BY	DATE
E	ADD MITSUBISHI TO LIST	6292		02/07
D	REDESIGN FRAME	5896	N.M.	01/05
C	CHANGE RAILS AND BLOCKS	5325	N.M.	06/02
B	SIGMA II MOTORS	5202	N.M.	12/01
A	CHANGE RAILS	4138	N.M.	08/99

MATERIAL/FINISH

STOCK/ASSY No.

TOLERANCE UNLESS SPECIFIED
X.XXX ±
X.XX ±
X.X ±
ANGLE ±

MILLTRONICS
1400 MILL LANE 952-442-1410
WACONIA, MN 55387 USA

TITLE BRIDGE SUB-ASSEMBLY
APPLICATION BRIDGE MILL
SCALE 20:1 | DWG No. 6-10-031-004 | SIZE B
DATE 15 JUN 98 | DRAWN BY THOMPSON | SHEET NO. 2 OF 2

Table Assembly

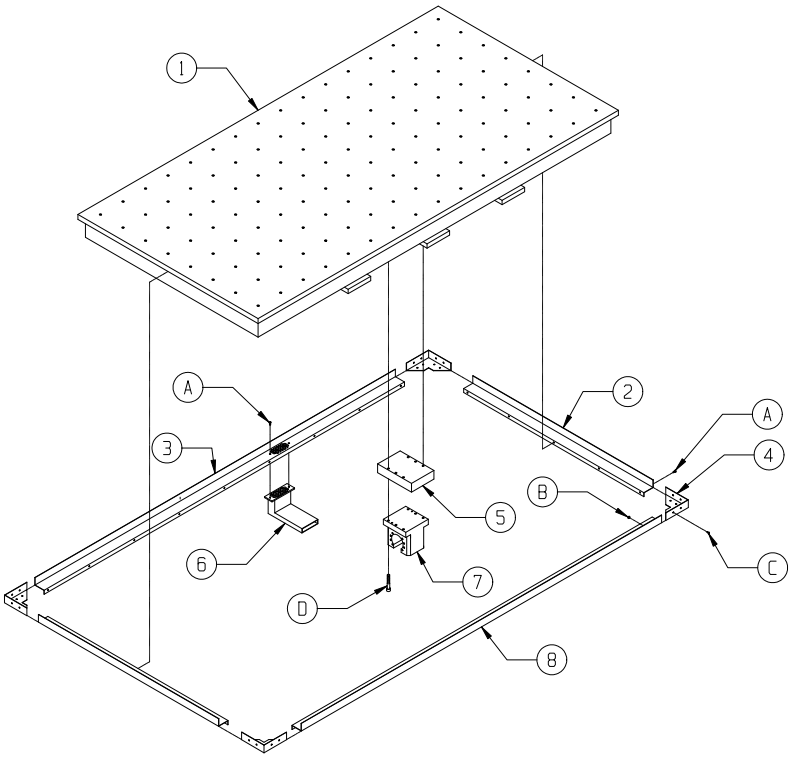

REV.	DESCRIPTION	E.C.O. NO.	APP'D BY	DATE
A	REDESIGN FRAME	5897		02/05

MATERIAL/FINISH

STOCK/ASSY No.

TOLERANCE UNLESS SPECIFIED
X.XXX ±
X.XX ±
X.X ±
ANGLE ±

MILLTRONICS
1400 MILL LANE 952-442-1410
WACONIA, MN 55387 USA

TITLE: TABLE SUB-ASSEMBLY
APPLICATION: BRIDGE MILL
SCALE: 20:1 | DWG No.: 6-10-031-005 | SIZE: B
DATE: 05 JUN 98 | DRAWN BY: THOMPSON | SHEET NO.: 1 OF 2

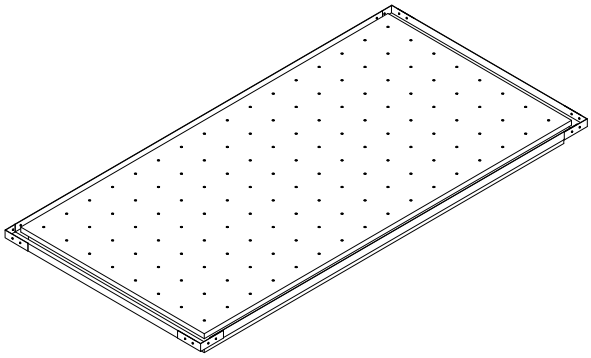

PARTS LIST			
No.	QTY	STOCK No.	DESCRIPTION
1	2		MACHINE TABLE
2	2		TABLE TROUGH - END
3	1		TABLE TROUGH - WITH DRAIN
4	4		TABLE TROUGH - CORNER
5	1		X-AXIS CARRIER SPACER
6	1		TABLE DRAIN CHUTE
7	2		X-AXIS CARRIER - MACHINED
8	1		TABLE TROUGH - WITHOUT DRAIN

HARDWARE LIST		
No.	QTY	DESCRIPTION
A	47	1/4-20 x 3/8 BHCS
B	32	10-32 NUT
C	32	10-32 3/8 BHCS
D	6	3/8-16 x 4 SHCS

REV.	DESCRIPTION	E.C.O. NO.	APP'D BY	DATE
A	REDESIGN FRAME	5897		02/05

MATERIAL/FINISH

STOCK/ASSY No.

TOLERANCE UNLESS SPECIFIED
X.XXX ±
X.XX ±
X.X ±
ANGLE ±

MILLTRONICS
1400 MILL LANE 952-442-1410
WACONIA, MN 55387 USA

TITLE: TABLE SUB-ASSEMBLY
APPLICATION: BRIDGE MILL
SCALE: 20:1 | DWG No. 6-10-031-005 | SIZE: B
DATE: 05 JUN 98 | DRAWN BY: THOMPSON | SHEET NO. 2 OF 2

Head Assembly

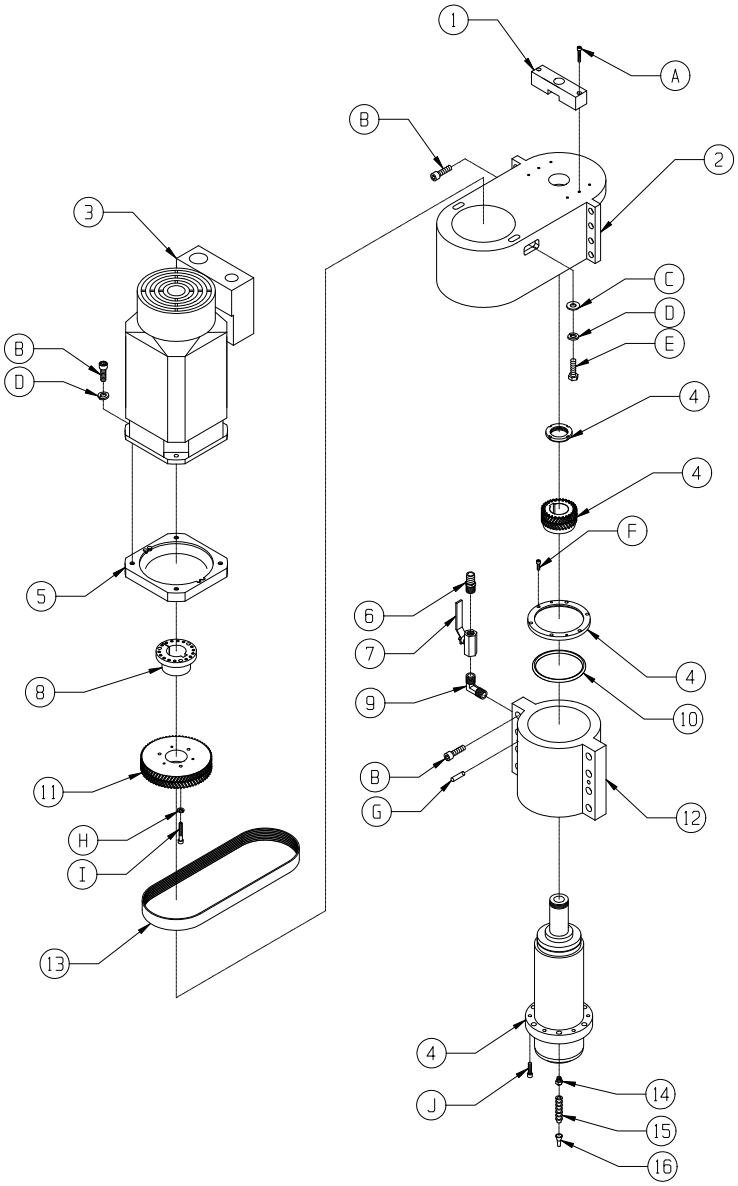

REV.	DESCRIPTION	E.C.O. NO.	APP'D BY	DATE
H	REMOVE DRAWBAR CYLINDER	6014		11/05
G	ADD O-RING	5894	N.M.	01/05
F	NEW DRAW BAR AIR CYLINDER	5438	N.M.	01/03
E	ADD MO-132 MOTOR	5412	N.M.	10/02
D	CHANGE SPINDLE ASSEMBLY	5245	N.M.	02/02
C	CHANGE SPINDLE	5186	N.M.	11/01
B	CHANGE SPINDLE & MOTOR	5089	N.M.	05/01
A	CHANGE DRAWBAR CYLINDER	3869	N.M.	3/99

MATERIAL/FINISH

STOCK/ASSY No.

MILLTRONICS
1400 MILL LANE 952-442-1410
WACONIA, MN 55387 USA

TITLE: HEAD SUB-ASSEMBLY

APPLICATION: BRIDGE MILL

SCALE: 10:1 | DWG No. 6-10-031-013 | SIZE: B

DATE: 04 JUN 98 | DRAWN BY: THOMPSON | SHEET NO. 1 OF 2

TOLERANCE UNLESS SPECIFIED
X.XXX ±
X.XX ±
X.X ±
ANGLE ±

CERTAIN INFORMATION CONTAINED HEREIN THE EXCLUSIVE PROPERTY OF MILLTRONICS MFG. CO. IT IS GIVEN IN CONFIDENCE AND IS NOT TO BE USED OR DISCLOSED TO OTHER THAN THE INTENDED RECIPIENT WITHOUT EXPRESSED WRITTEN CONSENT OF MILLTRONICS MFG. CO.

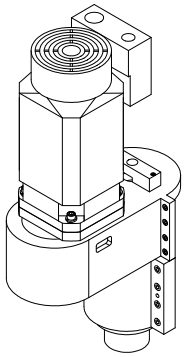

HARDWARE LIST		
No.	QTY	DESCRIPTION
A	2	1/4-20 x 1 1/2 SHCS
B	16	1/2-13 x 1 1/2 SHCS
C	2	1/2 FLAT WASHER
D	6	1/2 LOCK WASHER
E	2	1/2-13 x 1 1/2 HHCS
F	6	1/4-20 x 3/4 SHCS
G	2	3/8 DOWEL PIN
H	3	5/16 LOCK WASHER
I	3	5/16-18 x 2 SHCS
J	6	5/16-18 x 1 1/4 SHCS

PARTS LIST			
No.	QTY	STOCK No.	DESCRIPTION
1	1		DRAW BAR EXT. TUBE GUIDE
2	1		MACHINE HEAD
3	1	SEE TABLE	SPINDLE MOTOR
4	1	SEE TABLE	SPINDLE ASSEMBLY
5	1	SEE TABLE	MOTOR PLATE
6	1	NU-66	3/4 BARB 1/2 NPT FITTING
7	1	NU-64	BRASS BALL VALVE
8	1	PY-97	PULLEY BUSHING
9	1	NU-140	1/2 NPT MALE ELBOW
10	1	SEE TABLE	O-RING
11	1	SEE TABLE	SPINDLE MOTOR PULLEYS
12	1		SPINDLE CARTRIDGE HOUSING
13	1	BT-62	W896 SPINDLE BELT
14	6	NU-111	1/4 LOCKLINK 1/8 NPT
15	24	MA-22	LOCKLINK HOSE
16	6	MA-216	1/4 NOZZLE

O-RING	
STOCK No.	DESCRIPTION
WX-182	60mm OPTION
WX-270	70mm OPTION

SPINDLE MOTOR PULLEYS	
STOCK No.	DESCRIPTION
PY-188	12,000 RPM & 15,000 RPM
PY-192	6,000 RPM & 8,000 RPM

SPINDLE MOTORS	
STOCK No.	DESCRIPTION
MO-121	18kw DUAL WINDING SPINDLE MOTOR - YASKAWA
MO-150	11kw SINGLE WINDING SPINDLE MOTOR - YASKAWA
MO-132	11kw DUAL WINDING SPINDLE MOTOR - YASKAWA

SPINDLE ASSEMBLY SELECTION								
KW \ RPM	60mm SPINDLE				70mm SPINDLE			
	6000	8000	12000	15000	6000	8000	12000	15000
11kw SNGL-WINDING	9900	9900-1	9899-4	9899-5	9899	9899-1	9899-2	9899-3
11kw DUAL-WINDING	9900	9900-1	9899-4	9899-5	9899	9899-1	9899-2	9899-3
18kw DUAL-WINDING	9900	9900-1	9899-4	9899-5	9899	9899-1	9899-2	9899-3

MOTOR PLATES	
STOCK No.	DESCRIPTION
MPB-40	11kw OR 18kw DUAL WINDING
MPB-45	11kw SINGLE WINDING

REV.	DESCRIPTION	E.C.O. NO.	APP'D BY	DATE
H	REMOVE DRAWBAR CYLINDER	6014		11/05
G	ADD O-RING	5894	N.M.	01/05
F	NEW DRAW BAR AIR CYLINDER	5438	N.M.	01/03
E	ADD MO-132 MOTOR	5412	N.M.	10/02
D	CHANGE SPINDLE ASSEMBLY	5245	N.M.	02/02
C	CHANGE SPINDLE	5186	N.M.	11/01
B	CHANGE SPINDLE & MOTOR	5089	N.M.	05/01
A	CHANGE DRAWBAR CYLINDER	3869	N.M.	03/99

MATERIAL/FINISH

STOCK/ASSY No.

MILLTRONICS
1400 MILL LANE 952-442-1410
WACONIA, MN 55387 USA

TITLE: HEAD SUB-ASSEMBLY

APPLICATION: BRIDGE MILL

SCALE: 10:1 | DWG No. 6-10-031-013 | SIZE: B

DATE: 04 JUN 98 | DRAWN BY: THOMPSON | SHEET NO. 2 OF 2

TOLERANCE UNLESS SPECIFIED
X.XXX ±
X.XX ±
X.X ±
ANGLE ±

CERTAIN INFORMATION CONTAINED HEREIN THE EXCLUSIVE PROPERTY OF MILLTRONICS MFG. CO. IT IS GIVEN IN CONFIDENCE AND IS NOT TO BE USED OR DISCLOSED TO OTHER THAN THE INTENDED RECIPIENT WITHOUT EXPRESSED WRITTEN CONSENT OF MILLTRONICS MFG. CO.

Z Axis Assembly (for belt drive)

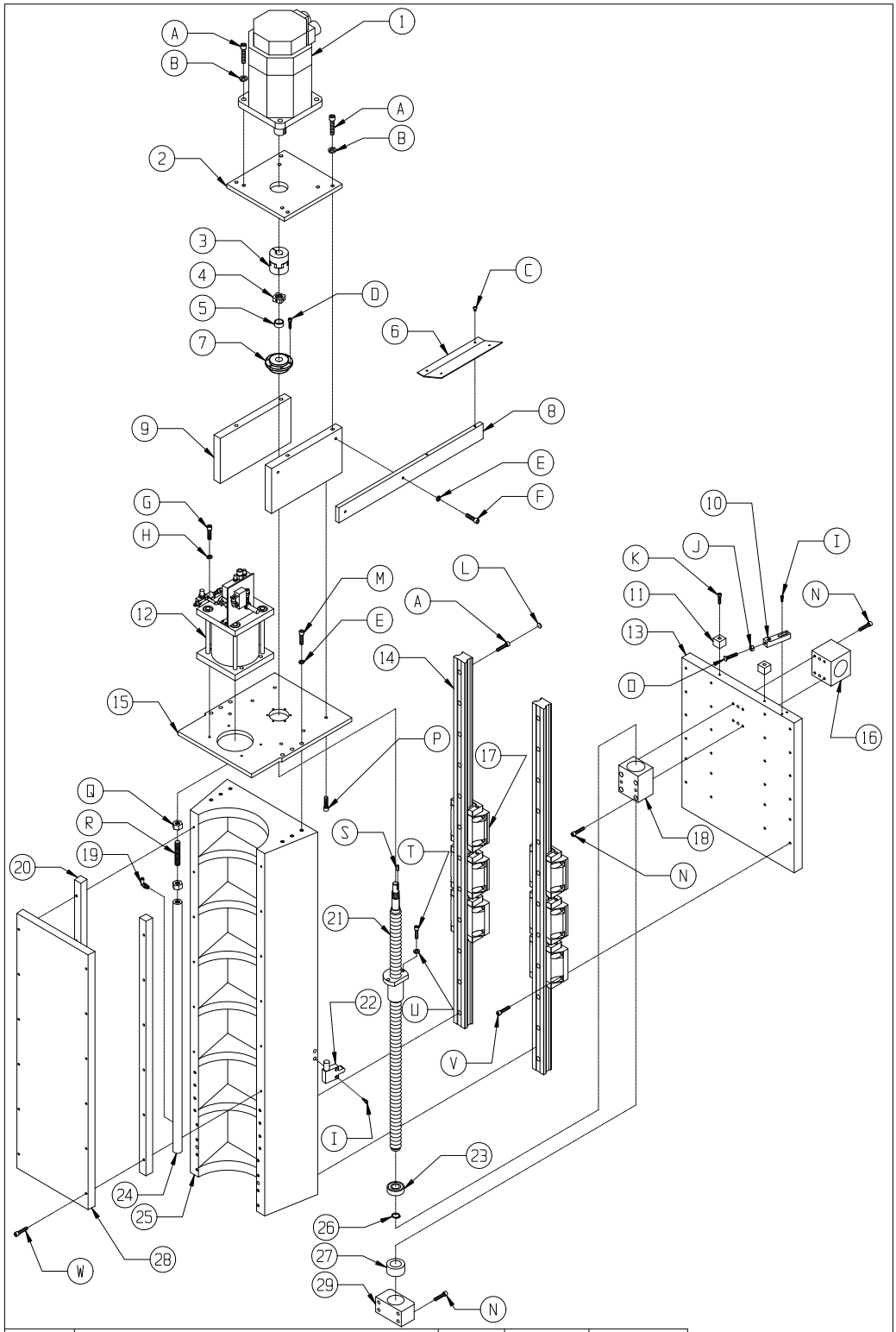

REV.	DESCRIPTION	E.C.O. NO.	APP'D BY	DATE
H	CHANGE DRAWBAR CYLINDER & ADD MITSUBISHI MOTOR TABLE	6885		12/09
G	MOVE DRAWBAR CYLINDER, CHANGE FRONT COVER	6013	N.M.	10/05
F	REDESIGN FRAME	5898	N.M.	02/05
E	CHANGE BLOCKS AND RAILS	5326	N.M.	06/02
D	SIGMA II MOTORS	5203	N.M.	12/01
C	CHANGE BELTS/PULLEYS	5187	N.M.	11/01
B	LARGER Z MOTOR	4565	N.M.	05/00
A	CHANGE RAILS	4139	N.M.	08/99

CERTAIN INFORMATION CONTAINED HEREIN THE EXCLUSIVE PROPERTY OF MILLTRONICS MFG. CO. IT IS GIVEN IN CONFIDENCE AND IS NOT TO BE USED OR DISCLOSED TO OTHER THAN THE INTENDED RECIPIENT WITHOUT EXPRESSED WRITTEN CONSENT OF MILLTRONICS MFG. CO.

MILLTRONICS
1400 MILL LANE 952-442-1410
WACONIA, MN 55387 USA

TITLE	Z - AXIS SUB ASSEMBLY	SCALE	10:1	DWG No. 6-10-031-014	SIZE B
APPLICATION	BRIDGE MILL	DATE	05 JUN 98	DRAWN BY THOMPSON	SHEET NO. 1 OF 2

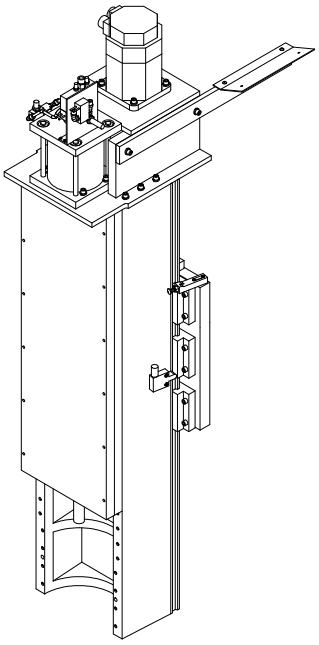

PARTS LIST			
No.	QTY	STOCK No.	DESCRIPTION
1	1	SEE TABLE	AXIS MOTOR W/BRAKE
2	1		Z-AXIS MOTOR PLATE
3	1	SEE TABLE	COUPLER
4	1	MP1-94	BALL SCREW LOCK NUT
5	1	MP1-107	BEARING LOCK NUT SPACER
6	1		CABLE TRACK BRACKET
7	1	BG-94	AXIS BEARING
8	1		CABLE TRACK SUPPORT
9	2		MOTOR PLATE SPACERS
10	1	MPL-72	SWITCH DOG
11	2	MP-718	POM HARD STOP BUMPER
12	1	10018114	NU-418 DRAWBAR CYLINDER ASSEMBLY
13	1		Y/Z RAIL MOUNTING PLATE
14	2	SEE TABLE	45mm 1220 RAILS
15	1		Z-AXIS MOUNTING PLATE
16	1		Y-AXIS BALL SCREW CARRIER
17	6	SEE TABLE	45mm RAIL BLOCK
18	1		Z-AXIS BALL SCREW CARRIER
19	1	NU-161	ELBOW
20	2		FRONT PLATE SPACER
21	1	MP-569	Z-AXIS BALL SCREW
22	1	SW-193	LIMIT SWITCH
23	1	BG-02	BEARING SKF6204 2Z
24	1		DRAW BAR EXTENSION TUBE
25	1		Z-AXIS MAIN - MACHINED
26	1	MP1-108	BALL SCREW SNAP RING
27	1		POM HARD STOP RING
28	1		Z-AXIS FRONT PLATE
29	1		Z-AXIS RADIAL SUPPORT

RAIL & BLOCK LIST		
No.	DESCRIPTION	PART No.
14	BALL RAIL	MPB-58
	ROLLER RAIL	MPB-71
17	BALL RAIL BLOCK	MP-728
	ROLLER RAIL BLOCK	MP-819

MOTOR & COUPLER TABLE				
No.	YASKAWA	FANUC	SIEMENS	MITSUBISHI
1	MO-138 (3Kw)	22Nm A06B-0247-B500	16Nm 1FK7083-5AF71-1EB0	MO-185 (3.5Kw)
3	MA-248	MA-248	MA-261	MA-248

HARDWARE LIST		
No.	QTY	DESCRIPTION
A	32	1/2-13 x 1 1/2 SHCS
B	8	1/2 LOCK WASHER
C	2	1/4-20 x 3/8 BHCS
D	6	1/4-20 x 1 SHCS
E	12	3/8 LOCK WASHER
F	2	3/8-16 x 1 1/2 SHCS
G	4	1/4-20 1 1/4 SHCS
H	4	1/4 LOCK WASHER
I	4	M5-.8 x 20mm SHCS
J	1	M8-1.25 HEX NUT
K	2	M5-.8 x 16mm SHCS
L	24	RAIL PLUGS
M	10	3/8-16 x 1 3/4 SHCS
N	12	5/16-18 x 1 1/2 SHCS
O	1	M8-1.25 x 40mm BHCS
P	6	3/8-16 x 1 1/4 SHCS
Q	2	5/8-11 HEX NUT
R	1	5/8-11 x 3 ROD
S	1	3/16 x 3/16 x 1/2 KEY
T	3	5/16-18 x 1 1/4 SHCS
U	3	5/16 LOCK WASHER
V	24	3/8-16 x 1 1/2 SHCS
W	12	3/8-16 x 2 1/4 SHCS

REV.	DESCRIPTION OF CHANGE	E.C.O. No.	APP'D BY	DATE
H	CHANGE DRAWBAR & ADD MITSU.	6885		12/09
G	MOVE DRAWBAR CYLINDER	6013	N.M.	10/05
F	REDESIGN FRAME	5898	N.M.	02/05
E	CHANGE RAILS AND BLOCKS	5326	N.M.	06/02
D	SIGMA II MOTORS	5203	N.M.	12/01
C	CHANGE BELTS/PULLEYS	5187	N.M.	11/01
B	LARGER Z MOTOR	4565	N.M.	5/00
A	CHANGE RAILS	4139	N.M.	8/99

MATERIAL/FINISH

STOCK/ASSY No.

TOLERANCE UNLESS SPECIFIED

X.XXX	+/-	.005
X.XX	+/-	.010
X.X	+/-	.030
ANGLE	+/-	1.0°

MILLTRONICS
1400 MILL LANE 952-442-1410
WACONIA, MN 55387 USA

TITLE: Z - AXIS SUB ASSEMBLY

APPLICATION: BRIDGE MILL

SCALE: 10:1 | DWG No. 6-10-031-014 | SIZE: B

DATE: 05 JUN 98 | DRAWN BY: THOMPSON | SHEET No. 2 OF 2

Z Axis Assembly (for inline spindle models)

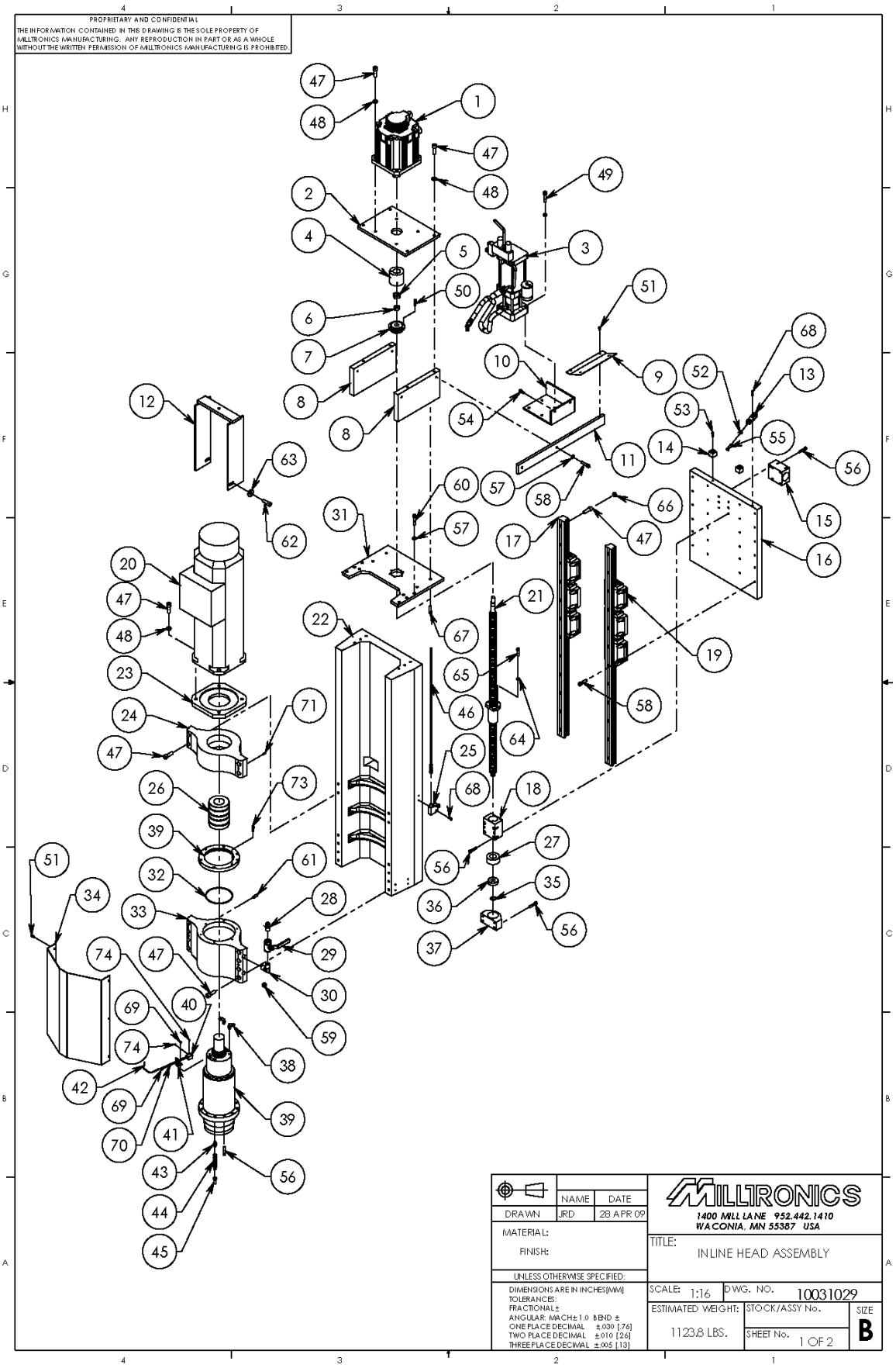

PROPRIETARY AND CONFIDENTIAL

THE INFORMATION CONTAINED IN THIS DRAWING IS THE SOLE PROPERTY OF MILLTRONICS MANUFACTURING. ANY REPRODUCTION IN PART OR AS A WHOLE WITHOUT THE WRITTEN PERMISSION OF MILLTRONICS MANUFACTURING IS PROHIBITED.

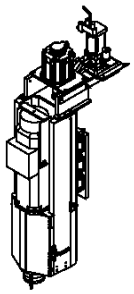

ITEM NO.	QTY.	PART NUMBER	DESCRIPTION
1	1	SEE TABLE	Z MOTOR
2	1	-	Z AXIS MOTOR PLATE
3	1	10018108	AIR/OIL AMPLIFIER SYSTEM
4	1	SEE TABLE	MOTOR COUPLER
5	1	MP10094	BALLSCREW LOCKNUT
6	1	MP10107	BEARING LOCK NUT SPACER
7	1	BG00094	BALL SCREW SUPPORT BEARING
8	2	-	MOTOR PLATE SPACERS
9	1	-	CABLE TRACK BRACKET
10	1	MPTT128	AIR/OIL INTENSIFER (NU-388) MOUNT
11	1	-	CABLE TRACK SUPPORT
12	1	SEE TABLE	MOTOR LIFT
13	1	MPL0072	ML15 X-AXIS SWITCH DOG
14	2	MP00718	POM HARDSTOP BLOCK
15	1	-	Y - AXIS BALLSCREW CARRIER
16	1	-	Y/Z RAIL MOUNTING PLATE
17	2	SEE TABLE	45mm INA RAIL
18	1	-	Z - AXIS BALLSCREW CARRIER
19	6	SEE TABLE	45mm RAIL BLOCK
20	1	SEE TABLE	SPINDLE MOTOR
21	1	MP00569	1.25 x 10mm x 39.72L BALLSCREW
22	1	-	BR Z HEAD
23	1	-	INLINE MOTOR PLATE
24	1	-	SPINDLE LOWER MOUNT - NARROW
25	1	SW00193	LIMIT SWITCH
26	1	SEE TABLE	SPINDLE COUPLER
27	1	-	POM HARD STOP RING
28	1	NU00066	FITTING 1/2" NPT - 3/4" BARB
29	1	NU00064	1/2" NPT BALL VALVE
30	1	NU00140	ELBOW
31	1	-	Z - AXIS BEARING MOUNT
32	1	WX00270	SPINDLE RING SEAL
33	1	-	SPINDLE LOWER MOUNT
34	1	MPB0190	INLINE BRIDGE HEAD COVER
35	1	MP10108	RETAINING RING EXTERNAL
36	1	BG00002	BEARING NACHI
37	1	-	Z - AXIS RADIAL SUPPORT
38	2	NU00171	ELBOW - M/S 1/4 TUBE x 1/4NPT
39	1	SEE TABLE	INLINE SPINDLE
40	1	BR00159	INLINE DRAWBAR SWITCH HOLDER
41	1	BR00158	INLINE DRAWBAR SWITCH BRACKET
42	1	PR00050	PROX SWITCH
43	6	NU00111	LOC-LINE THREADED INSERT 1/4
44	24	MA00022	LOC-LINE LINKS 1/4
45	6	MA00216	LOC-LINE NOZZLE 1/4
46	1	SW00238	YELLOW CABLE
* 47	48	SHCS 1/2-13 x 1 1/2	1/2-13 x 1 1/2 SHCS
48	12	WASHER LOCK 1/2	1/2 LOCK WASHER
49	4	SHCS M10-1.5 x 45	M10-1.5 X 45mm SHCS
50	6	SHCS 1/4-20 x 1	1/4-20 x 1 SHCS
51	8	BHCS M6-1.0 x 12	M6-1.0 x 12mm BHCS
52	1	NUT HEX M8-1.25	M8-1.25 HEX NUT
53	2	SHCS M5-0.8 x 16	M5-0.8 x 16mm SHCS
54	4	SHCS M8-1.25 x 20	M8-1.25 x 20mm SHCS
55	1	BHCS M8-1.25 X 40	M8-1.25 x 40mm BHCS
56	18	SHCS 5/16-18 x 1 1/2	5/16-18 x 1 1/2 SHCS
57	8	WASHER LOCK 3/8	3/8 LOCK WASHER
58	26	SHCS 3/8-16 x 1 1/2	3/8-16 x 1 1/2 SHCS
59	1	PLUG 1/2 NPT	1/2 NPT PLUG
60	6	SHCS 3/8-16 x 1 3/4	3/8-16 x 1 3/4 SHCS
61	2	DOWEL PIN 3/8 x 1	3/8 x 1 DOWEL PIN
62	2	SEE TABLE	SHCS
63	2	SEE TABLE	FLAT WASHER
64	2	WASHER LOCK 5/16	5/16 LOCK WASHER
65	2	SHCS 5/16-18 x 1 1/4	5/16-18 x 1 1/4 SHCS
* 66	24	RAIL PLUG	RAIL PLUG
67	6	SHCS 3/8-16 x 1 1/4	3/8-16 x 1 1/4 SHCS
68	4	SHCS M5-0.8 x 20	M5-0.8 x 20mm SHCS
69	4	BHCS M4-0.7 x 8	M4-0.7 x 8mm BHCS
70	2	WASHER FLAT M4	M4 WASHER FLAT
71	2	DOWEL PIN 3/16	3/16 DOWEL PIN
72	4	WASHER LOCK M10	M10 LOCK WASHER
73	6	SHCS M6-1.0 x 20	M6-1.0 x 20mm SHCS
74	2	SHSS 10-32 x 1/4	10-32 x 1/4 SHSS

* ROLLER RAILS USE AN ADDITIONAL 22 RAIL PLUGS & 1/2-13 x 1 1/2 SHCS.

MOTOR LIFT		
ITEM No.	MITSUBISHI MOTORS	
	MO00166	MO00167
12	MPB0201	MPB0216
62	M10-1.5 x 20mm SHCS	M12-1.75 x 20mm SHCS
63	M10 FLAT WASHER	M12 FLAT WASHER

MOTOR COUPLER TABLE		
ITEM No.	MOTOR-END	SPINDLE-END
	HUB 1 DIA. (mm)	HUB 2 DIA. (mm)
26	24	50
	28	50
	32	50
	38	50
	40	50
	42	50
	48	50
	50	50
	55	50

RAIL & BLOCK LIST		
ITEM No.	DESCRIPTION	PART No.
17	BALL RAIL	MPB0058
	ROLLER RAIL	MPB0071
19	BALL RAIL BLOCK	MP00728
	ROLLER RAIL BLOCK	MP00819

MOTOR & COUPLER TABLE				
ITEM No.	YASKAWA	FANUC	SIEMENS	MITSUBISHI
1	MO00138 (3kW)	22Nm A06B-0247-B500	16Nm 1FK7083-5AF71-1EB0	MO00186 (3.5 kW)
				MO00188 (5 kW)
4	MA00248	MA00248	MA00261	MA00248

SPINDLE MOTOR		
ITEM No.	STOCK No.	DESCRIPTION
20	A06B-1477-B133#0121	FANUC
	A06B-1479-B133#0221	FANUC
	MO00166	MITSUBISHI
	MO00167	MITSUBISHI
	1PM6137	SIEMENS
	1PM6105	SIEMENS
	1PM6133	SIEMENS

INLINE SPINDLE		
ITEM No.	STOCK No.	DESCRIPTION
39	MP00864	10K RPM
	MP00865	15K RPM

	NAME	DATE
DRAWN	JRD	28 APR 09

MATERIAL:

FINISH:

UNLESS OTHERWISE SPECIFIED:

DIMENSIONS ARE IN INCHES[MM]
TOLERANCES:
FRACTIONAL ±
ANGULAR: MACH ± 1.0 BEND ±
ONE PLACE DECIMAL ±.030 [.76]
TWO PLACE DECIMAL ±.010 [.26]
THREE PLACE DECIMAL ±.005 [.13]

MILLTRONICS
1400 MILL LANE 952.442.1410
WACONIA, MN 55387 USA

TITLE: INLINE HEAD ASSEMBLY

SCALE: 1:30 DWG. NO. 10031029

ESTIMATED WEIGHT: 1123.8 LBS. STOCK/ASSY No. SHEET No. 2 OF 2 SIZE B

Power Drawbar Cylinder Assembly (for inline spindle models)

PROPRIETARY AND CONFIDENTIAL
THE INFORMATION CONTAINED IN THIS DRAWING IS THE SOLE PROPERTY OF MILLTRONICS MANUFACTURING. ANY REPRODUCTION IN PART OR AS A WHOLE WITHOUT THE WRITTEN PERMISSION OF MILLTRONICS MANUFACTURING IS PROHIBITED.

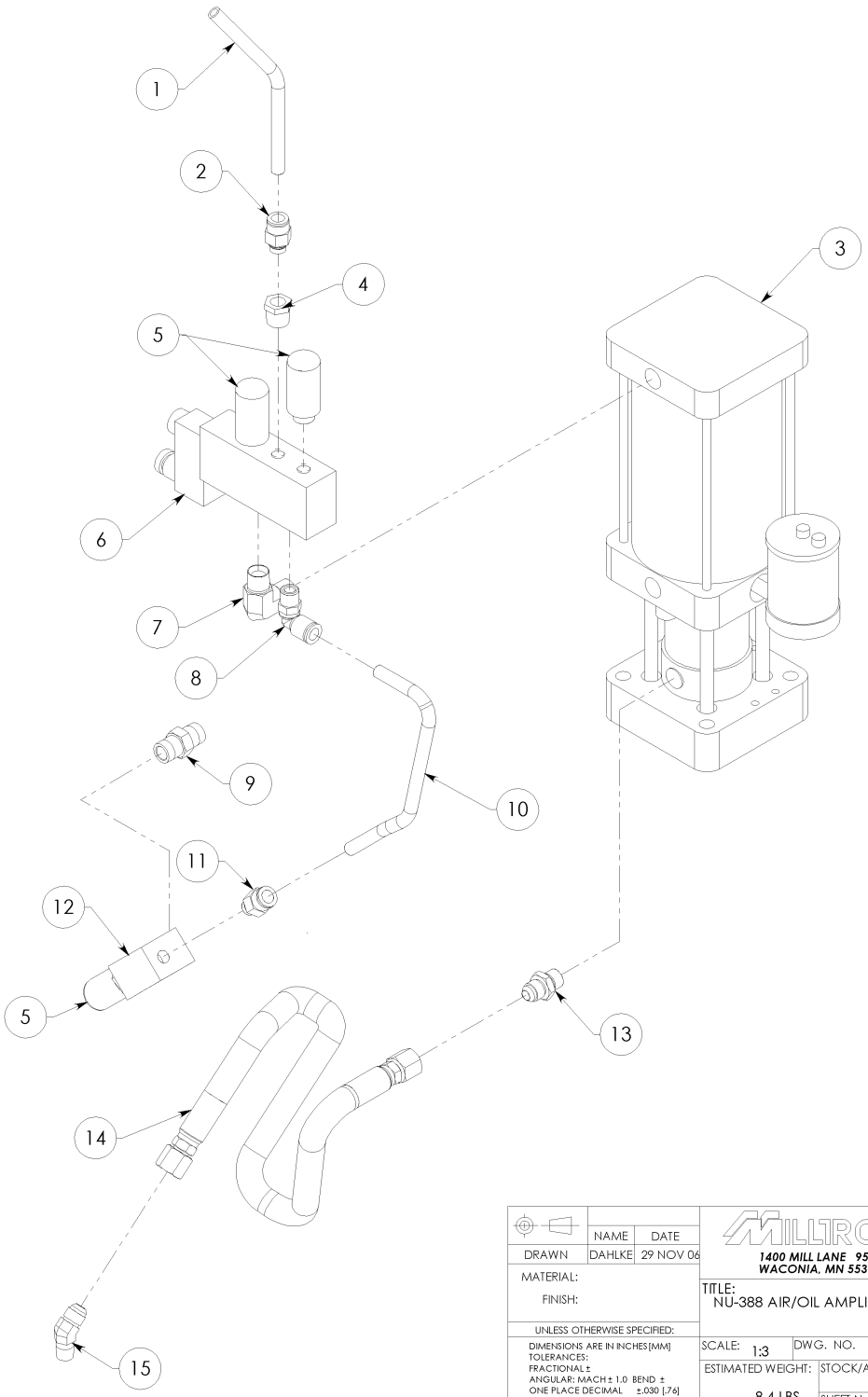

	NAME	DATE
DRAWN	DAHLKE	29 NOV 06

MATERIAL:
FINISH:

UNLESS OTHERWISE SPECIFIED:
DIMENSIONS ARE IN INCHES [MM]
TOLERANCES:
FRACTIONAL ±
ANGULAR: MACH ± 1.0 BEND ±
ONE PLACE DECIMAL ±.030 [.76]
TWO PLACE DECIMAL ±.010 [.26]
THREE PLACE DECIMAL ±.005 [.13]

MILLTRONICS
1400 MILL LANE 952.442.1410
WACONIA, MN 55387 USA

TITLE:
NU-388 AIR/OIL AMPLIFIER ASSEMBLY

SCALE: 1:3 | DWG. NO. 10018108
ESTIMATED WEIGHT: 8.4 LBS. | STOCK/ASSY No. | SHEET No. 1 OF 2 | SIZE B

PROPRIETARY AND CONFIDENTIAL
THE INFORMATION CONTAINED IN THIS DRAWING IS THE SOLE PROPERTY OF MILLTRONICS MANUFACTURING. ANY REPRODUCTION IN PART OR AS A WHOLE WITHOUT THE WRITTEN PERMISSION OF MILLTRONICS MANUFACTURING IS PROHIBITED.

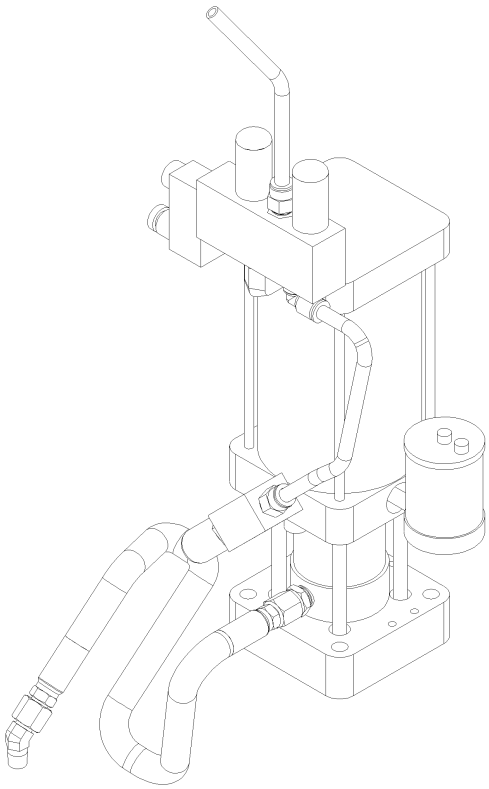

ITEM NO.	QTY	PART NO.	DESCRIPTION
1	1	NU00078	3/8 AIR LINE
2	1	NU00095	TUBE CONNECTOR - M/S 3/8 TUBE 1/4NPT
3	1	NU00408	AIR/OIL AMPLIFIER SYSTEM
4	1	NU00027	REDUCER - 3/8 x 1/4NPT
5	3	NU00375	MUFFLER
6	1	NU00293	SOLENOID VALVE
7	1	NU00292	MALE ELBOW - 3/8NPT
8	1	NU00412	SWIVEL ELBOW - M/S 10mm TUBE 3/8NPT
9	1	NU00235	NIPPLE - 3/8NPT
10	1	NU00306	10mm AIR LINE
11	1	NU00297	TUBE CONNECTOR - M/S 10mm TUBE 3/8NPT
12	1	NU00402	EXHAUST VALVE
13	1	NU00409	FLARE FITTING - 3/8NPT
14	1	NU00403	19" INLINE AMPLIFIER HOSE
15	1	NU00410	ELBOW FLARE FITTING - 1/8NPT x 45°

	NAME	DATE
DRAWN	DAHLKE	29 NOV 06

MATERIAL:
FINISH:

UNLESS OTHERWISE SPECIFIED:
DIMENSIONS ARE IN INCHES[MM]
TOLERANCES:
FRACTIONAL ±
ANGULAR: MACH ± 1.0 BEND ±
ONE PLACE DECIMAL ±.030 [.76]
TWO PLACE DECIMAL ±.010 [.26]
THREE PLACE DECIMAL ±.005 [.13]

MILLTRONICS
1400 MILL LANE 952.442.1410
WACONIA, MN 55387 USA

TITLE:
NU-388 AIR/OIL AMPLIFIER ASSEMBLY

SCALE: 1:3
DWG. NO. 10018108
ESTIMATED WEIGHT: 8.4 LBS.
STOCK/ASSY No.
SHEET No. 2 OF 2
SIZE B

Power Drawbar Cylinder Assembly (for belt drive)

PARTS LIST			
ITEM	QTY	STOCK No.	DESCRIPTION
1	2	NU-177	1/8 NPT MUFFLER
2	1	NU-95	MALE STRAIGHT 1/4 NPT - 3/8 TUBE
3	4	NU-187	SWIVEL ELBOW 1/8 NPT - 1/4 TUBE
4	1	NU-179	DRAW BAR - AIR VALVE
5	1	NU-320	AIR PURGE - AIR VALVE
6	3	NU-186	SWIVEL ELBOW 1/4 NPT - 1/4 TUBE
7	1	PR-58	DRAWBAR PROX SWITCH
8	1	NU-394	1/8 NPT - 1/4 NPT REDUCING NIPPLE
9	1	BR-145	DRAWBAR PROX SWITCH BRACKET
10	1	NU-395	1/8 NPT STREET TEE
11	1	NU-190	FLOW CONTROL FOR BLOW OUT
12	26"	NU-25	1/4" TUBING
13	1	NU-319	TRIPLE STACK DRAW BAR AIR CYLINDER
14	1	NU-474	SWIVEL ELBOW 1/8 NPT - 3/8 TUBE

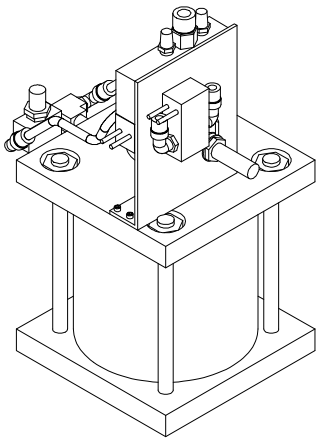

HARDWARE LIST		
ITEM	QTY	DESCRIPTION
A	2	6-32 x 3/4 SHCS
B	2	8-32 x 1 SHCS
C	2	8-32 x 3/8 SHCS

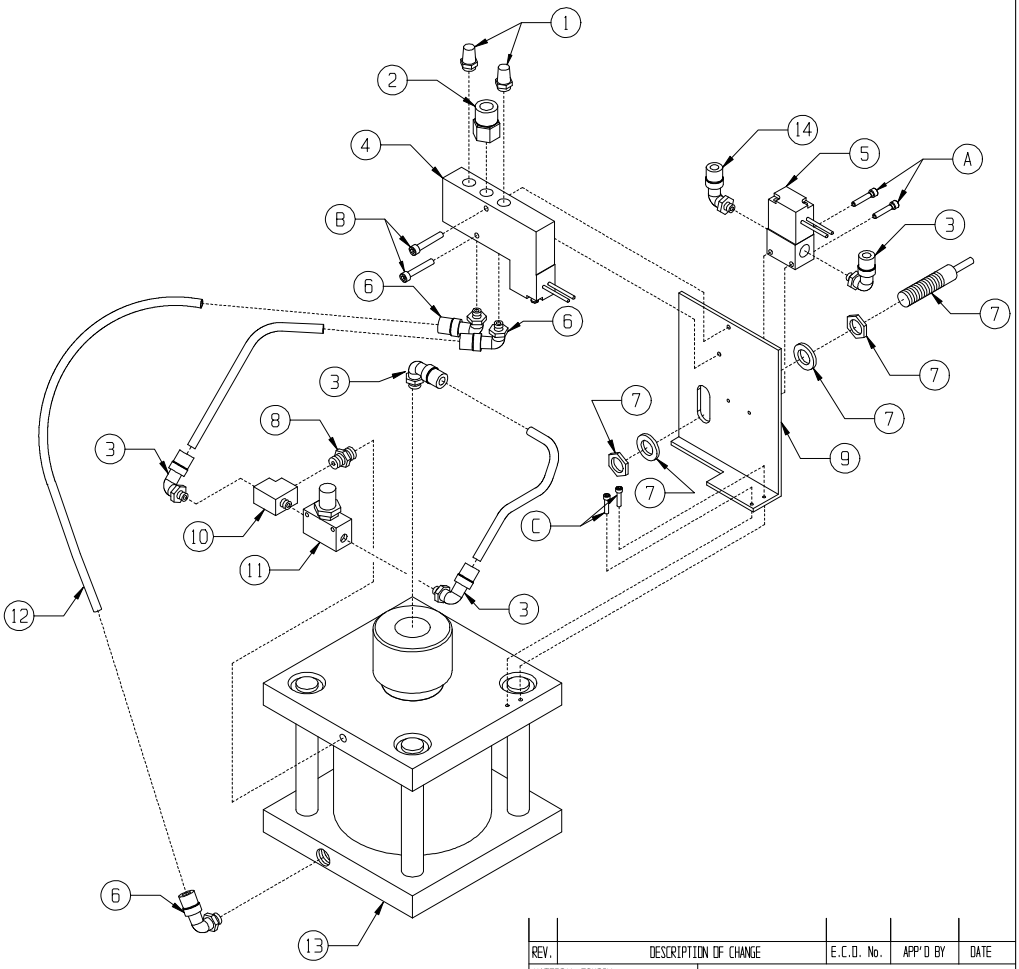

REV.	DESCRIPTION OF CHANGE	E.C.O. No.	APP'D BY	DATE

MATERIAL/FINISH

STOCK/ASSY No.

MILLTRONICS
1400 MILL LANE 952-442-1410
WACONIA, MN 55387 USA

TITLE NU-418 DRAW BAR ASSEMBLY

APPLICATION GENERAL PRODUCTS

SCALE 3:1 | DWG No. 6-10-018-114 | SIZE B

DATE 14 OCT 08 | DRAWN BY DAHLKE | SHEET No. 1 OF 1

TOLERANCE UNLESS SPECIFIED
X.XXX +/-
X.XX +/-
X.X +/-
ANGLE +/-

CERTAIN INFORMATION CONTAINED HEREIN THE EXCLUSIVE PROPERTY OF MILLTRONICS MFG. CO. IT IS GIVEN IN CONFIDENCE AND IS NOT TO BE USED OR DISCLOSED TO OTHER THAN THE INTENDED RECIPIENT WITHOUT EXPRESSED WRITTEN CONSENT OF MILLTRONICS MFG. CO.

Coolant Trough Assembly (BR50)

THIS IS USED ON ASSEMBLY FOR VM15, VM16, VM17.

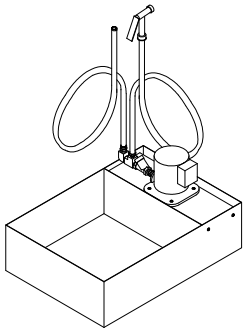

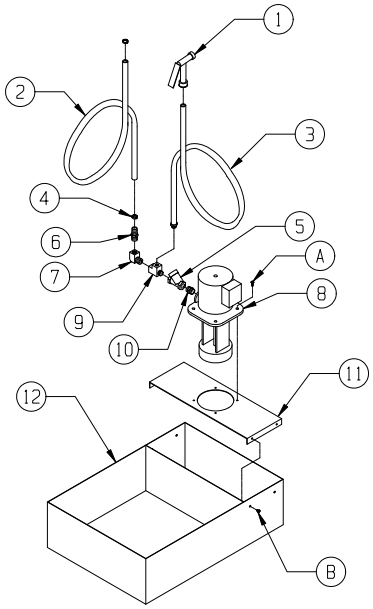

PARTS LIST			
No.	QTY	STOCK No.	DESCRIPTION
1	1	NU-124	WATER HOSE NOZZLE
2	20'	NU-69	3/4" NYLOBRAID HOSE
3	1	NU-130	WASHDOWN HOSE ASSEMBLY
4	2	NU-141	1" HOSE CLAMP
5	1	NU-128	1/2" SWING CHECK VALVE
6	1	NU-66	HOSE BRASS 3/4"
7	1	NU-125	1/2" ELBOW-STREET
8	1	MA-162	FLOOD PUMP 1/4 HP MOTOR
9	1	NU-127	1/2" STREET T
10	1	NU-65	1/2" NIPPLE
11	1	MP1-24	FLOOD PUMP MOUNTING PLATE
12	1	MP1-21	FLOOD CONTAINER

HARDWARE LIST		
No.	QTY	DESCRIPTION
A	4	1/4-20 x 5/8 BHCS
B	4	1/4-20 x 3/8 BHCS

REV.	DESCRIPTION OF CHANGE	E.C.O. No.	APP'D BY	DATE

MATERIAL/FINISH

STOCK/ASSY No.

TOLERANCE UNLESS SPECIFIED

X.XXX	+/-	.005
X.XX	+/-	.010
X.X	+/-	.030
ANGLE	+/-	1.0°

MILLTRONICS
1400 MILL LANE 952-442-1410
WACONIA, MN 55387 USA

TITLE COOLANT TROUGH ASSEMBLY

APPLICATION PARTNER I

SCALE 15:1 | DWG No. 6-10-008-066 | SIZE B

DATE 10 APR 00 | DRAWN BY DAHLKE | SHEET No. 1 OF 1

Coolant Trough Assembly With Auger

PROPRIETARY AND CONFIDENTIAL
THE INFORMATION CONTAINED IN THIS DRAWING IS THE SOLE PROPERTY OF MILLTRONICS MANUFACTURING. ANY REPRODUCTION IN PART OR AS A WHOLE WITHOUT THE WRITTEN PERMISSION OF MILLTRONICS MANUFACTURING IS PROHIBITED

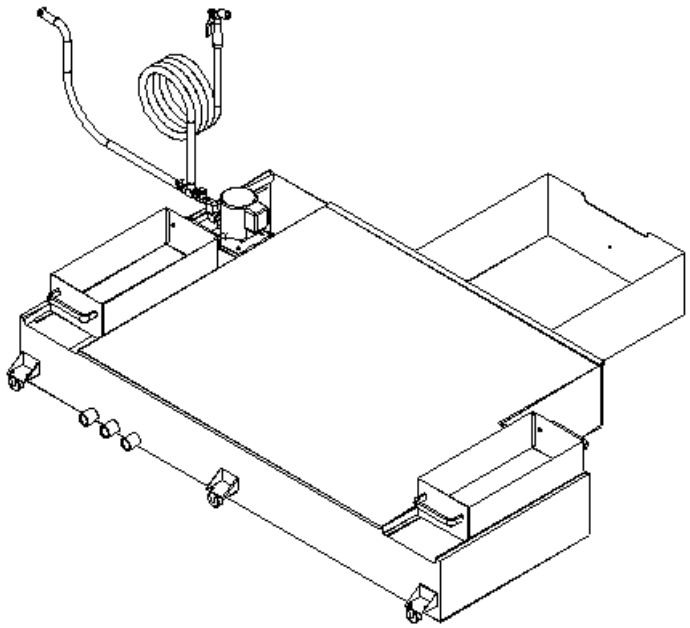

ITEM NO.	QTY.	PART NUMBER	DESCRIPTION
1	1	-	BR TANK COVER
2	1	NU00124	NOZZEL WATER HOSE
3	1	NU00130	WASHDOWN HOSE ASSEMBLY 20'
4	2	NU00141	1" HOSE CLAMP
5	1	NU00127	TEE 1/2"NPT STREET 2225P-8
6	1	NU00069	NYLABRAID 3/4" 4511-0751
7	1	NU00128	1/2" SWING CHECK VALVE
8	1	NU00066	FITTING 1/2" NPT - 3/4" BARB
9	2	NU00125	1/2" STREET ELBOW
10	1	NU00065	1/2-14 NPT MALE/MALE NIPPLE
11	1	MPB0137	BR60/80 COOLANT TANK
12	1	MA00162	FLOOD PUMP MOTOR
13	4	WX00230	HANDLE
14	6	EL00088	WHEEL CASTER
15	2	MP10488	DRAWER-CHIP-VM20
16	4	BHCS M6-1.0 x 12	M6-1.0 x 12mm BHCS
17	14	BHCS M6-1.0 x 10	M6-1.0 x 10mm BHCS
18	2	SHCS M6-1.0 x 10	M6-1.0 x 10 SHCS
19	8	BHCS M8-1.25 x 16	M8 - 1.25 x 16 BHCS

REV.	DESCRIPTION	E.C.O. NO.	APP'D BY	DATE
A	FIX PARTS LIST	6901		12/09

DRAWN — NAME — DATE

MATERIAL:

FINISH:

UNLESS OTHERWISE SPECIFIED:
DIMENSIONS ARE IN INCHES [MM]
TOLERANCES:
FRACTIONAL ±
ANGULAR: MACH ± 1.0 BEND ±
ONE PLACE DECIMAL ± .010 [.25]
TWO PLACE DECIMAL ± .010 [.25]
THREE PLACE DECIMAL ± .005 [.13]

MILLTRONICS CNC MACHINES
7400 MILL LANE 952.442.7470
WACONIA, MN 55387 USA

TITLE:
BR MPB0137 COOLANT TANK ASSEMBLY

SCALE: 1:16 — DWG. NO. 10031030

ESTIMATED WEIGHT: 25.698 LBS. — STOCK/ASSY NO. — SHEET NO. 1 OF 2 — SIZE B

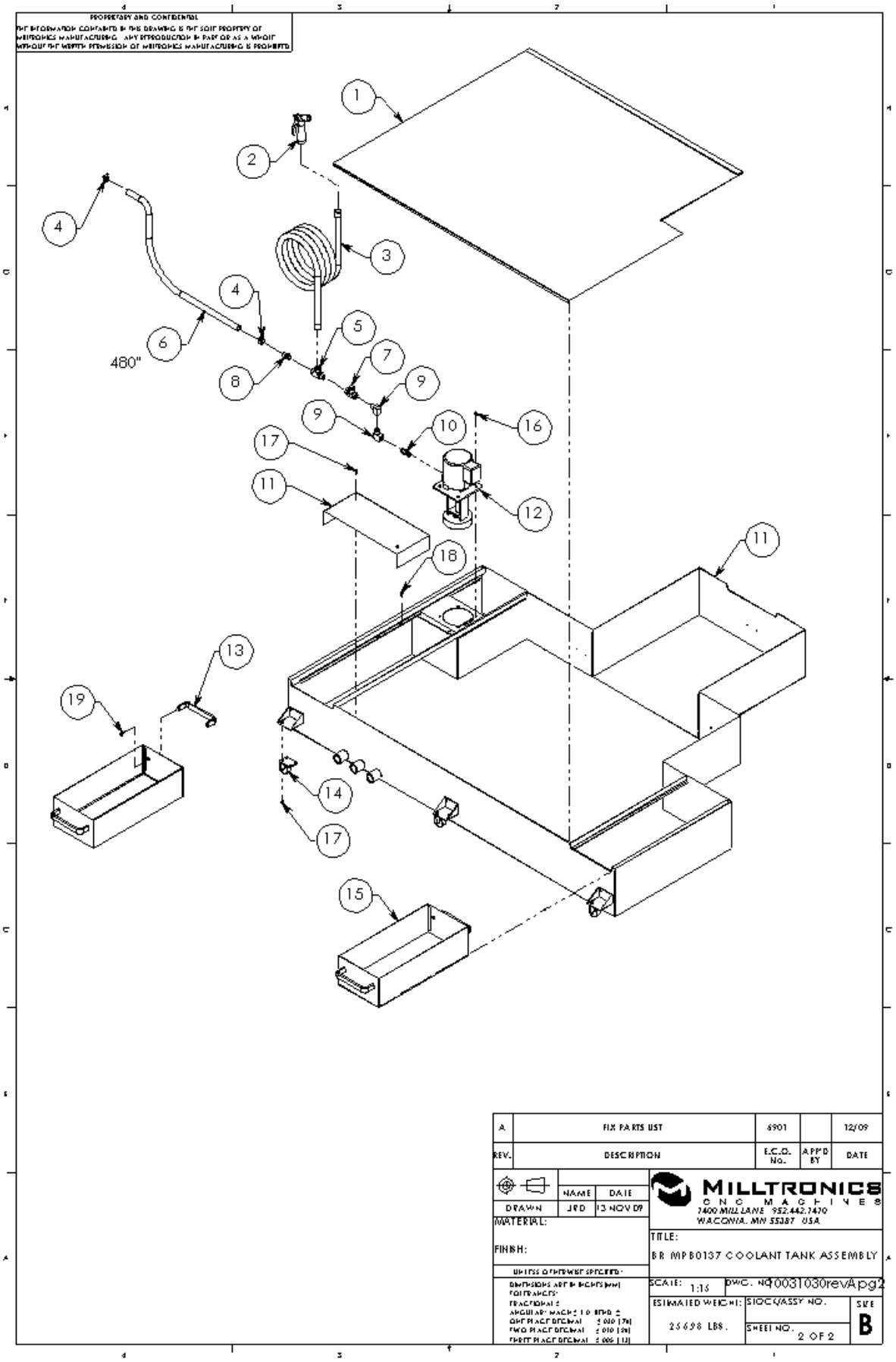
PROPRIETARY AND CONFIDENTIAL
THE INFORMATION CONTAINED IN THIS DRAWING IS THE SOLE PROPERTY OF MILLTRONICS MANUFACTURING. ANY REPRODUCTION IN PART OR AS A WHOLE WITHOUT THE WRITTEN PERMISSION OF MILLTRONICS MANUFACTURING IS PROHIBITED
1
2
3
4
4
5
6
7
8
9
9
10
11
11
12
13
14
15
16
17
17
18
19
480"
A
FIX PARTS LIST
6901
12/09
REV.
DESCRIPTION
E.C.O. No.
APP'D BY
DATE
NAME
DATE
DRAWN
JRD
13 NOV 09
MILLTRONICS CNC MACHINES
7400 MILL LANE 952.442.7470
WACONIA, MN 55387 USA
MATERIAL:
FINISH:
TITLE:
BR MPB0137 COOLANT TANK ASSEMBLY
UNLESS OTHERWISE SPECIFIED:
SCALE: 1:16
DWG. NO 0031030revApg2
ESTIMATED WEIGHT: 25.698 LBS.
STOCK/ASSY NO.
SIZE
B
SHEET NO. 2 OF 2

Leveling Instructions For BR 50

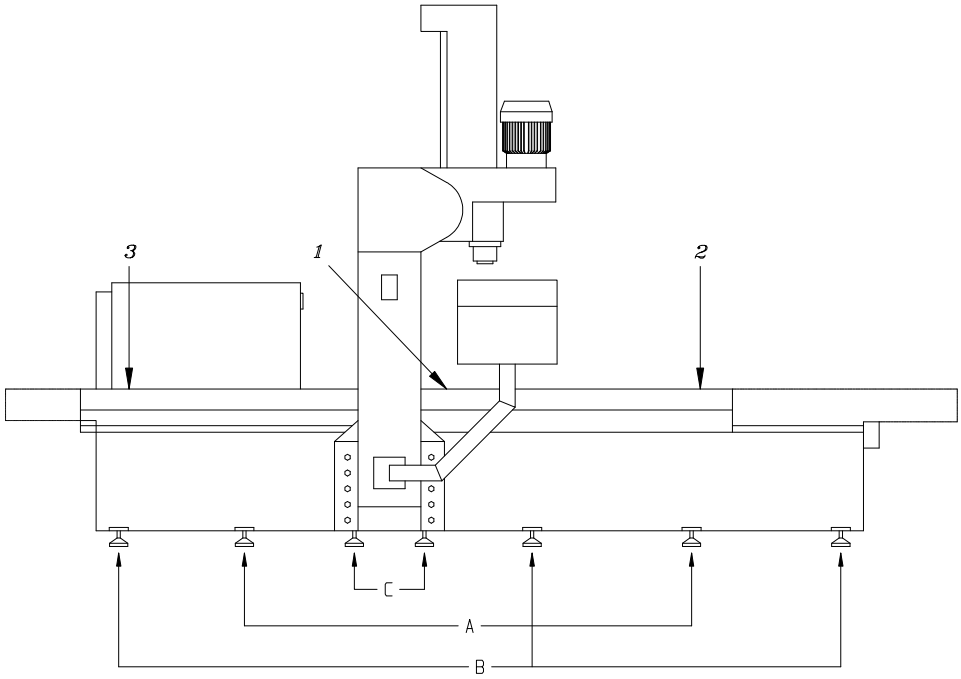

REV.	DESCRIPTION	E.C.O. NO.	APP'D BY	DATE

MATERIAL/FINISH

STOCK/ASSY No.

TOLERANCE UNLESS SPECIFIED
X.XXX ±
X.XX ±
X.X ±
ANGLE ±

MILLTRONICS MANUFACTURING
1400 MILL LANE (612) 442-1410
WACONIA, MN 55387

TITLE BR50 LEVELING INSTRUCTIONS

APPLICATION BRIDGE MILL

SCALE 20:1 | DWG No. 6-10-031-018 | SIZE B

DATE 15 JUN 98 | DRAWN BY THOMPSON | SHEET NO. 1 OF 2

NOTES:

1. Center the table in the travel of the X axis.
2. Raise the 4 leveling pads directly under the columns pads "C" most of the way in so they are NOT touching the floor.
3. With the level located in the center of the table (position 1) use pads "A" to level the machine in both X and Y.
4. With the level located at the ends of the table (position 2 and 3) level each end with pads "B" in both X and Y.
5. Double-check the level at all locations.
6. The remaining pads should be threaded approximately 2/3 to 3/4 of the way in and touching the floor. Even pressure should be applied to each of these pads.
7. Lower the 4 leveling pads directly below the columns until they are resting on the floor with even pressure.
8. Spin the locknut for each pad up then secure them in place.
9. Using a magnetic base with a dial indicator sweep the table to check tram. The tram should sweep acceptably (typically .001" over a 10" diameter sweep) if the table surface has been machined at the factory. Adjust the 4 leveling pads below the column to adjust the tram if necessary. At this stage it is more important to be level to tram and NOT level to the precision level.

REV.	DESCRIPTION	E.C.O. NO.	APP'D BY	DATE

MATERIAL/FINISH

STOCK/ASSY No.

TOLERANCE UNLESS SPECIFIED
X.XXX ±
X.XX ±
X.X ±
ANGLE ±

MILLTRONICS MANUFACTURING
1400 MILL LANE (612) 442-1410
WACONIA, MN 55387

TITLE BR50 LEVELING INSTRUCTIONS
APPLICATION BRIDGE MILL
SCALE 20:1 | DWG No. 6-10-031-018 | SIZE B
DATE 15 JUN 98 | DRAWN BY THOMPSON | SHEET NO. 2 OF 2

Leveling Instructions For BR 60 & 80

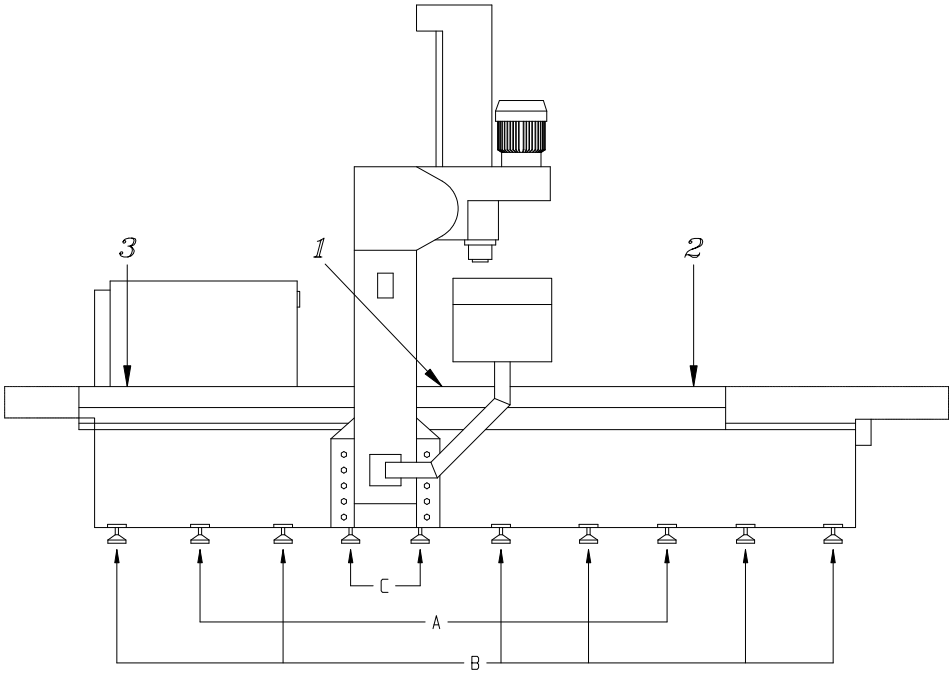

REV.	DESCRIPTION	E.C.O. NO.	APP'D BY	DATE

MATERIAL/FINISH

STOCK/ASSY No.

TOLERANCE UNLESS SPECIFIED
X.XXX ±
X.XX ±
X.X ±
ANGLE ±

MILLTRONICS MANUFACTURING
1400 MILL LANE (612) 442-1410
WACONIA, MN 55387

TITLE BR60 & 80 LEVELING INSTRUCTIONS

APPLICATION BRIDGE MILL

SCALE 20:1 | DWG No. 6-10-031-019 | SIZE B

DATE 15 JUN 98 | DRAWN BY THOMPSON | SHEET NO. 1 OF 2

NOTES:

1. Center the table in the travel of the X axis.
2. Raise the 4 leveling pads directly under the columns pads "C" most of the way in so they are NOT touching the floor.
3. With the level located in the center of the table (position 1) use pads "A" to level the machine in both X and Y.
4. With the level located at the ends of the table (position 2 and 3) level each end with pads "B" in both X and Y.
5. Double-check the level at all locations.
6. The remaining pads should be threaded approximately 2/3 to 3/4 of the way in and touching the floor. Even pressure should be applied to each of these pads.
7. Lower the 4 leveling pads directly below the columns until they are resting on the floor with even pressure.
8. Spin the locknut for each pad up then secure them in place.
9. Using a magnetic base with a dial indicator sweep the table to check tram. The tram should sweep acceptably (typically .001" over a 10" diameter sweep) if the table surface has been machined at the factory. Adjust the 4 leveling pads below the column to adjust the tram if necessary. At this stage it is more important to be level to tram and NOT level to the precision level.

REV.	DESCRIPTION	E.C.O. NO.	APP'D BY	DATE

MATERIAL/FINISH

STOCK/ASSY No.

TOLERANCE UNLESS SPECIFIED
X.XXX ±
X.XX ±
X.X ±
ANGLE ±

MILLTRONICS MANUFACTURING
1400 MILL LANE (612) 442-1410
WACONIA, MN 55387

TITLE BR60 & 80 LEVELING INSTRUCTIONS

APPLICATION BRIDGE MILL

SCALE 20:1 | DWG No. 6-10-031-019 | SIZE B

DATE 15 JUN 98 | DRAWN BY THOMPSON | SHEET NO. 2 OF 2

Machine Lubrication Instructions

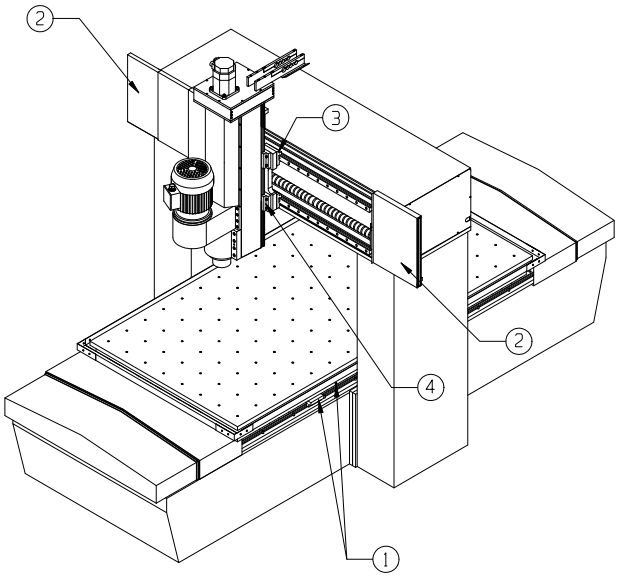

GREASE EVERY 500 HOURS OR SIX MONTHS

1. GREASE THE X-AXIS BEARING BLOCKS, 3 OR 4 ON EACH SIDE, AND THE X-AXIS BALLSCREW 2 PUMPS PER BLOCK.
2. SLIDE THE Y-AXIS WAY COVERS OUT TO ACCESS THE BEARING BLOCKS AND BALLSCREW.
3. GREASE THE 6 BEARING BLOCKS, 3 ON EACH SIDE, AND THE Y-AXIS BALLSCREW 2 PUMPS PER BLOCK AND BALLSCREW.
4. GREASE THE 6 BEARING BLOCKS, 3 ON EACH SIDE, AND THE Z-AXIS BALLSCREW 2 PUMPS PER BLOCK AND BALLSCREW.
5. INSTALL ALL WAY COVERS AND CYCLE MACHINE THE FULL TRAVELS AT 10 IPM MAX. TO FULLY LUBRICATE THE ENTIRE LENGTH OF THE RAILS AND BALLSCREWS.

REV.	DESCRIPTION OF CHANGE	E.C.O. No.	APP'D BY	DATE

MATERIAL/FINISH

STOCK/ASSY No.

TOLERANCE UNLESS SPECIFIED
X.XXX +/-
X.XX +/-
X.X +/-
ANGLE +/-

MILLTRONICS
1400 MILL LANE 952-442-1410
WACONIA, MN 55387 USA

TITLE BRIDGE MILL GREASE INSTRUCTIONS

APPLICATION BRIDGE MILL

SCALE 24:1 | DWG No. 6-11-031-001 | SIZE B

DATE 01 FEB 01 | DRAWN BY NEW | SHEET No. 1 OF 2

MOBILITH AW SERIES, MULTIPURPOSE EP GREASE	
PRODUCT NUMBER	64352-8
NLGI GRADE	1
COLOR	GREEN
STRUCTURE	SMOOTH/TACKY
SOAP TYPE	LITHIUM COMPLEX
MINERAL OIL VISCOSITY cST AT 40°C cST AT 100°C SUS AT 100°F SUS AT 210°F	 150 13 750 70
ISO VISCOSITY GRADE	150
PENETRATION AT 23°C (77°F), WORKED	325
DROPPING POINT, ASTM D 2265, °F	475
TIMKEN OK LOAD, ASTM D 2509, lb	40
FOUR-BALL EP TEST, ASTM D 2596, WELD LOAD, kg LOAD WEAR INDEX	 250 40
FOUR-BALL WEAR TEST, ASTM D 2266, SCAR DIAMETER, mm, MAX	 0.5
CORROSION PREVENTION, ASTM D 1743	PASS
WHEEL BEARING TEST, ASTM D 4290 MODIFIED, LEAKAGE, GRAM	 5

MOBIL VELOCITE OIL No. 10	
PRODUCT NUMBER	60068-4
GRAVITY, API	32.0
POUR, °C (°F), max.	-4 (25)
FLASH, °C (°F), min.	182 (360)
VISCOSITY cST AT 40° C	 22.0
cST AT 100° C	4.0
SUS AT 100° F	115
SUS AT 210° F	40
ISO VG	22
VISCOSITY INDEX	95
COLOR, ASTM D 1500	2.0
RUST PROTECTION, ASTM D 665	PASS
CINCINNATI MILACRON SPECIFICATION	P-45

MOBIL VACTRA OIL No. 2	
PRODUCT NUMBER	60049-4
SPECIFIC GRAVITY, 60/60F	0.88
POUR POINT, °C (°F), max.	-9 (16)
FLASH POINT, °C (°F), min.	244 (472)
VISCOSITY cST AT 40°C	 68
cST AT 100°C	8.6
SUS AT 100°F	356
SUS AT 210°F	55
VISCOSITY INDEX	97
ISO VG	68
COLOR, ASTM D 1500	4
FZG, PASS STAGES	11
4 BALL WELD, kg, ASTM D 2783	160
4 BALL WEAR, mm, ASTM D 4172	0.22
COPPER CORROSION, ASTM D 130	1B
RUST, D665A	PASS
VICKERS V-104C, mg D 2882 (MOD)	-
CMCO, P-SPEC, APPROVAL	P-47
BIJUR PT 37-1 APPROVAL	PASS
OKUMA APPROVAL	PASS

MOBIL DTE 24	
PRODUCT NUMBER	60262-3
98 CMCS CODE (DRUM)	98020E
SPECIFIC GRAVITY	0.871
POUR POINT, °C (°F), max	-18 (0)
FLASH POINT, °C (°F), min	200 (392)
VISCOSITY cST AT 40°C cST AT 100°C SUS AT 100°F SUS AT 210°F	 32 5.3 165 44
ISO VISCOSITY GRADE	32
VISCOSITY INDEX	95
RUST PROTECTION, ASTM D 665, A & B	PASS
COLOR, ASTM D1500, max	3.5
FZG GEAR TEST STAGES PASSED DIN 51534	12

REV.	DESCRIPTION OF CHANGE	E.C.O. No.	APP'D BY	DATE

MATERIAL/FINISH

STOCK/ASSY No.

TOLERANCE UNLESS SPECIFIED
X.XXX +/-
X.XX +/-
X.X +/-
ANGLE +/-

MILLTRONICS
1400 MILL LANE 952-442-1410
WACONIA, MN 55387 USA

TITLE BRIDGE MILL GREASE INSTRUCTIONS

APPLICATION BRIDGE MILL

SCALE 24:1 | DWG No. 6-11-031-001 | SIZE B

DATE 01 FEB 01 | DRAWN BY NEW | SHEET No. 2 OF 2

Retention Knob Chart

NOTE: STANDARD RETENTION KNOBS FOR 40 TAPER SPINDLES WITHOUT CTS

MAS RETENTION KNOBS STYLE CT-FLANGE 40 TAPER

ASSEMBLY SELECTION	DIMENSIONS A	B	C	ANGLE	MILLTRONICS MACHINE 60mm SPINDLE	70mm SPINDLE	COMMAND PART No.	KENNAMETAL PART No.	VALENITE PART No.	LYNDEX PART No.
4833	.59	.39	1.27	60°	RH19, RH20, RH30, RH33, RH35, RW15, RW20E, BR50, BR60, BR80 VM15, VM16, VM20, VM22, VM25, VM30, VMC15, VMC16, VMC20, VMC25, VMC30, MM18	RH20, RH30, RH33, RH35, BR50, BR60, BR80, VM16, VM20, VM22, VM25, VM30, VMC16, VMC20, VMC25, VMC30, TT24, TT40, HMC20, HMC35	RB4E-0002	RK31114A	PT-532-60	C40-6000

MAS RETENTION KNOBS STYLE BT-FLANGE 40 TAPER

ASSEMBLY SELECTION	DIMENSIONS A	B	C	ANGLE	MILLTRONICS MACHINE 60mm SPINDLE	70mm SPINDLE	COMMAND PART No.	KENNAMETAL PART No.	VALENITE PART No.	LYNDEX PART No.
4834	.59	.39	1.38	60°	RH19, RH20, RH30, RH33, RH35, RW15, RW20E, BR50, BR60, BR80 VM15, VM16, VM20, VM22, VM25, VM30, VMC15, VMC16, VMC20, VMC25, VMC30, MM18	RH20, RH30, RH33, RH35, BR50, BR60, BR80, VM16, VM20, VM22, VM25, VM30, VMC16, VMC20, VMC25, VMC30, TT24, TT40, HMC20, HMC35	RB4M-0002	RK31113A	PT-444-60	B40-6000

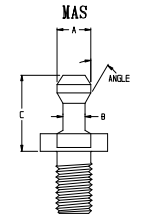

ENGLISH THREADS FOR V-FLANGE
METRIC THREADS FOR BT-FLANGE

NOTE: STANDARD RETENTION KNOBS FOR 40 TAPER SPINDLES WITH CTS

ANSI RETENTION KNOBS STYLE CT-FLANGE 40 TAPER

ASSEMBLY SELECTION	DIMENSIONS A	B	C	ANGLE	MILLTRONICS MACHINE 60mm SPINDLE	70mm SPINDLE	COMMAND PART No.	KENNAMETAL PART No.	VALENITE PART No.	LYNDEX PART No.
4836	.74	.49	.64	45°	SELECTION NOT AVAILIBLE	RH20, RH30, RH33, RH35, BR50, BR60, BR80, VM16, VM20, VM22, VM25, VM30, VMC16, VMC20, VMC25, VMC30, TT24, TT40, HMC20, HMC35	RC4E-0001	RK11122	PT-475C	C40-STD

ANSI RETENTION KNOBS STYLE BT-FLANGE 40 TAPER

ASSEMBLY SELECTION	DIMENSIONS A	B	C	ANGLE	MILLTRONICS MACHINE 60mm SPINDLE	70mm SPINDLE	COMMAND PART No.	KENNAMETAL PART No.	VALENITE PART No.	LYNDEX PART No.
4837	.74	.49	.75	45°	SELECTION NOT AVAILIBLE	RH20, RH30, RH33, RH35, BR50, BR60, BR80, VM16, VM20, VM22, VM25, VM30, VMC16, VMC20, VMC25, VMC30, TT24, TT40, HMC20, HMC35	RS4M-0115	RK11126A	N/A	B40-FADAL

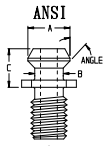

ENGLISH THREADS FOR V-FLANGE
METRIC THREADS FOR BT-FLANGE

NOTE: STANDARD RETENTION KNOBS FOR 50 TAPER SPINDLES WITH OR WITHOUT CTS

ANSI RETENTION KNOBS STYLE CT-FLANGE 50 TAPER

ASSEMBLY SELECTION	DIMENSIONS A	B	C	ANGLE	MILLTRONICS MACHINE	COMMAND PART No.	KENNAMETAL PART No.	VALENITE PART No.	LYNDEX PART No.
N/A	1.14	.83	1.00	45°	VM22XP, VM25XP, VM30XP, RH33XP, RH35XP, HMC70	RC6E-0001	DWG RK11144	N/A	C50-STD

ANSI RETENTION KNOBS STYLE BT-FLANGE 50 TAPER

ASSEMBLY SELECTION	DIMENSIONS A	B	C	ANGLE	MILLTRONICS MACHINE	COMMAND PART No.	KENNAMETAL PART No.	VALENITE PART No.	LYNDEX PART No.
N/A	1.14	.83	1.00	45°	VM22XP, VM25XP, VM30XP, RH33XP, RH35XP, HMC70	RS6M-0105	DWG RK11144A	N/A	N/A

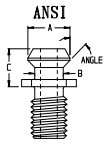

ENGLISH THREADS FOR V-FLANGE
METRIC THREADS FOR BT-FLANGE

NOTE: OPTIONAL RETENTION KNOBS FOR 40 TAPER SPINDLES

MAS RETENTION KNOBS STYLE CT-FLANGE 40 TAPER

ASSEMBLY SELECTION	DIMENSIONS A	B	C	ANGLE	MILLTRONICS MACHINE 60mm SPINDLE	70mm SPINDLE	COMMAND PART No.	KENNAMETAL PART No.	VALENITE PART No.	LYNDEX PART No.
4831	.59	.39	1.27	45°	SELECTION NOT AVAILIBLE	RH20, RH30, RH33, RH35, BR50, BR60, BR80, VM16, VM20, VM22, VM25, VM30, VMC16, VMC20, VMC25, VMC30, TT24, TT40, HMC20, HMC35	RB4E-0001	RK31114	PT-532-45	C40-4500

MAS RETENTION KNOBS STYLE BT-FLANGE 40 TAPER

ASSEMBLY SELECTION	DIMENSIONS A	B	C	ANGLE	MILLTRONICS MACHINE 60mm SPINDLE	70mm SPINDLE	COMMAND PART No.	KENNAMETAL PART No.	VALENITE PART No.	LYNDEX PART No.
4832	.59	.39	1.38	45°	SELECTION NOT AVAILIBLE	RH20, RH30, RH33, RH35, BR50, BR60, BR80, VM16, VM20, VM22, VM25, VM30, VMC16, VMC20, VMC25, VMC30, TT24, TT40, HMC20, HMC35	RB4M-0001	RK31113	PT-444-45	B40-4500

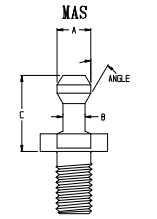

ENGLISH THREADS FOR V-FLANGE
METRIC THREADS FOR BT-FLANGE

DIN 69872 RETENTION KNOBS STYLE CT-FLANGE 40 TAPER

ASSEMBLY SELECTION	DIMENSIONS A	B	C	ANGLE	MILLTRONICS MACHINE 60mm SPINDLE	70mm SPINDLE	COMMAND PART No.	KENNAMETAL PART No.	VALENITE PART No.	LYNDEX PART No.
4838	.75	.55	1.02	75°	SELECTION NOT AVAILIBLE	RH20, RH30, RH33, RH35, BR50, BR60, BR80, VM16, VM20, VM22, VM25, VM30, VMC16, VMC20, VMC25, VMC30, TT24, TT40, HMC20, HMC35	RS4E-0114-C	DWG RK71125	N/A	C40-1500

DIN 69872 RETENTION KNOBS STYLE DIN-FLANGE 40 TAPER

ASSEMBLY SELECTION	DIMENSIONS A	B	C	ANGLE	MILLTRONICS MACHINE 60mm SPINDLE	70mm SPINDLE	COMMAND PART No.	KENNAMETAL PART No.	VALENITE PART No.	LYNDEX PART No.
4839	.75	.55	1.02	75°	SELECTION NOT AVAILIBLE	RH20, RH30, RH33, RH35, BR50, BR60, BR80, VM16, VM20, VM22, VM25, VM30, VMC16, VMC20, VMC25, VMC30, TT24, TT40, HMC20, HMC35	RS4M-0114-C	DWG RK71124	N/A	B40-1500

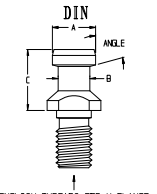

ENGLISH THREADS FOR V-FLANGE
METRIC THREADS FOR DIN-FLANGE

NOTES:
1. FOR SPINDLES OF 8000 RPM AND GREATER YOU MUST USE BALANCED TOOLING TO A G2.5 SPEC. OR IT WILL VOID THE SPINDLE WARRANTY.
2. CHART IS GOOD FOR ALL MACHINE VERSIONS LISTED FROM ECO DATE REV. G ON THIS DRAWING.

REV.	DESCRIPTION	E.C.O. NO.	APP'D BY	DATE
H	ADD VM22XP, RH33XP FRAMES TO 50 TAPER	6715		01/09
G	ADD MM18 AND MOVE HMC70 FRAMES TO 50 TAPER	6193	N.M.	10/06
F	ADD VMC, TT, AND HMC FRAMES	6175	N.M.	09/06
E	UPDATE CHART	5992	M.N.	08/05
D	ADD RH/RW12 & RH19	5146	N.M.	09/01
C	ADD RETENTION KNOBS TO CHART	4859	N.M.	12/00
B	CHANGE 70mm BT-FLANGE CHART	4730	N.M.	10/00
A	ADD LYNDEX CORP. IN CHART	4351	N.M.	1/00

MILLTRONICS
1400 MILL LANE 952-442-1410
WACONIA, MN 55387 USA

TITLE	RETENTION KNOB CHART	SCALE 1.75:1	DWG No. 6-11-018-054	SIZE B	
APPLICATION	GENERAL PRODUCTS	DATE 30 APR 99	DRAWN BY DAHLKE	SHEET NO. 1 OF 1	

Air Filter / Regulator / Lubricator Assembly

PARTS LIST			
ITEM	QTY	STOCK No.	DESCRIPTION
1	1	NU-199	1/4 NPT 3/8 TUBE SWIVEL ELBOW
2	1	NU-262	LOW PRESSURE REGULATOR W/GAGE
3	1	NU-212	LARGE FILTER/HIGH PRESSURE REGULATOR
4	1	NU-30	1/4 NPT PIPE NIPPLE
5	2	NU-210	LARGE MOUNTING SPACER
6	1	NU-211	LARGE MANIFOLD SPACER
7	1	NU-199	1/4 NPT 3/8 TUBE SWIVEL ELBOW
8	1	NU-430	DIGITAL AIR GUAGE WITH PRESSURE SWITCH
9	1	NU-219	1/4 NPT BRANCH TEE
10	1	NU-32	1/4 NPT 1/4 TUBE MALE STRAIGHT
11	1	NU-209	LARGE LUBRICATOR

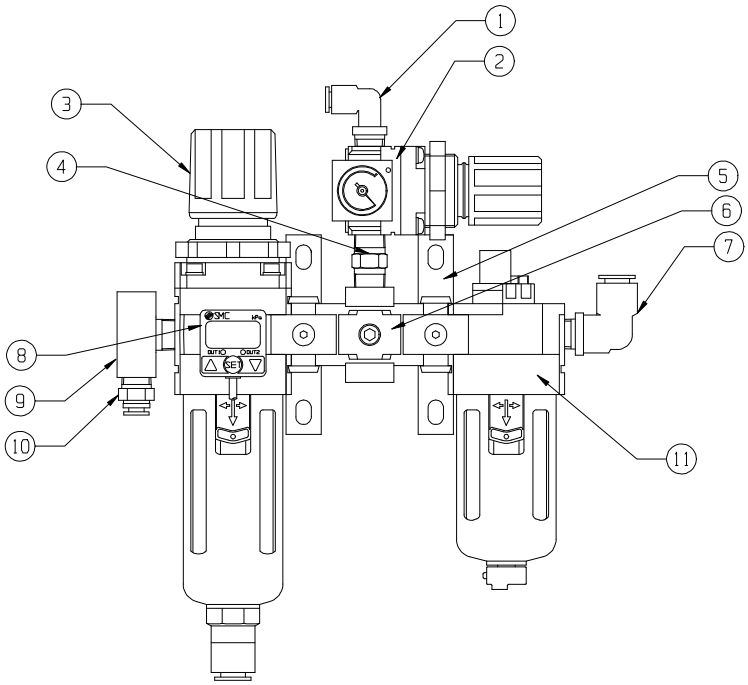

REV.	DESCRIPTION	E.C.O. NO.	APP'D BY	DATE

MATERIAL/FINISH

STOCK/ASSY No.

MILLTRONICS
1400 MILL LANE 952-442-1410
WACONIA, MN 55387 USA

TITLE: NU-417 FRL ASSEMBLY

APPLICATION: GENERAL PRODUCTS

SCALE: 3:1 | DWG No. 6-10-018-112 | SIZE B

DATE: 14 APR 08 | DRAWN BY: DAHLKE | SHEET NO. 1:1

TOLERANCE UNLESS SPECIFIED
X.XXX +/-
X.XX +/-
X.X +/-
ANGLE +/-

CERTAIN INFORMATION CONTAINED HEREIN THE EXCLUSIVE PROPERTY OF MILLTRONICS MFG. CO. IT IS GIVEN IN CONFIDENCE AND IS NOT TO BE USED OR DISCLOSED TO OTHER THAN THE INTENDED RECIPIENT WITHOUT EXPRESSED WRITTEN CONSENT OF MILLTRONICS MFG. CO.

BR60/80 Lift Off Door Assembly – Operator Side

PROPRIETARY AND CONFIDENTIAL
THE INFORMATION CONTAINED IN THIS DRAWING IS THE SOLE PROPERTY OF MILLTRONICS MANUFACTURING. ANY REPRODUCTION IN PART OR AS A WHOLE WITHOUT THE WRITTEN PERMISSION OF MILLTRONICS MANUFACTURING IS PROHIBITED.

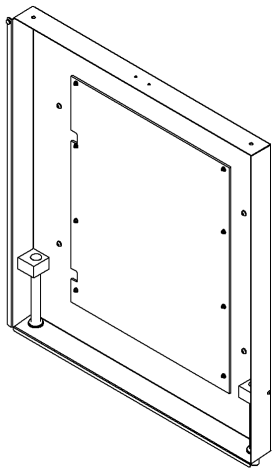

ITEM NO.	QTY.	PART NO.	DESCRIPTION
1	2	MPB0160	LIFT OFF PANEL - POST
2	2	MPB0158	PIPE MOUNT BLOCK
3	2	WX00164	RUBBER GROMMET
4	2	WX00297	HANDLE
5	1	MP60163	OPERATOR DOOR - LEXAN
6	1	SEE TABLE	LIFT OFF DOOR
7	1	WX00310	BUMPER DOOR GRAY
8	8	HD00058	M5 RUBBERIZED WASHER
9	2	DP1000	1" CAP PLUG
10	2	BHCS M6-1.0 x 50	M6-1.0 x 50 BHCS
11	2	BHCS M6-1.0 x 16	M6-1.0 x 16 BHCS
12	4	BHCS M8-1.25 x 16	M8-1.25 x 16 BHCS
13	8	NYLOCK HEX M5-0.8	M5-0.8 NYLOCK HEX NUT
14	4	WASHER FLAT M8	M8 FLAT WASHER

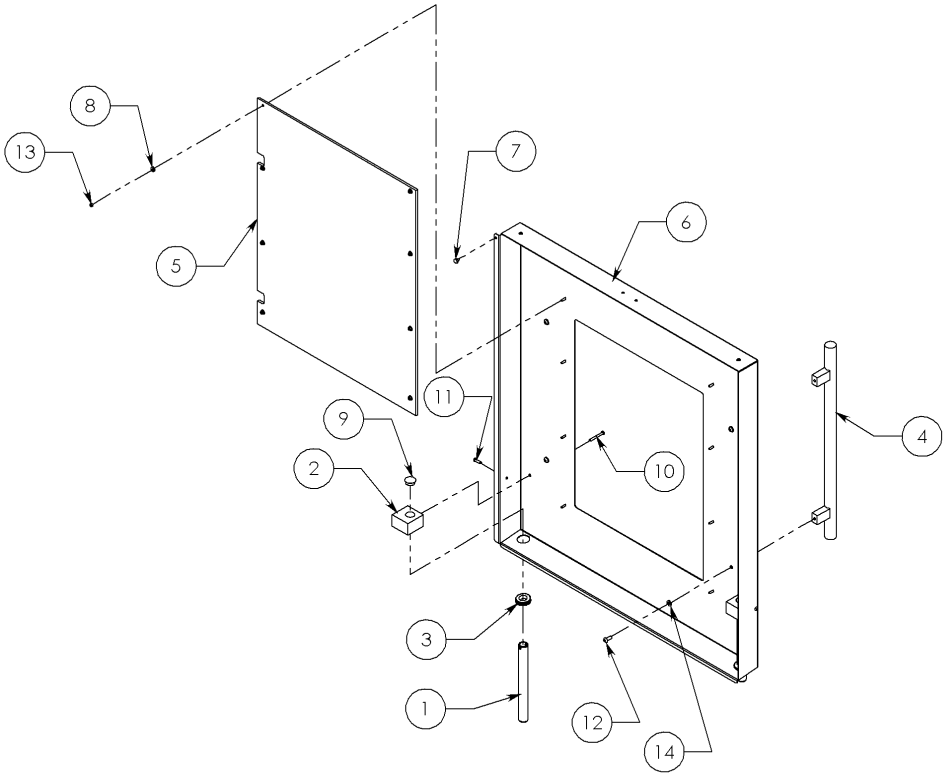

DOOR TABLE	
MPB0148	LIFT OFF DOOR - RIGHT
MPB0149	LIFT OFF DOOR - LEFT

	NAME	DATE
DRAWN	JRD	01 JUL 08

MATERIAL:
FINISH:
UNLESS OTHERWISE SPECIFIED:
DIMENSIONS ARE IN INCHES[MM]
TOLERANCES:
FRACTIONAL ±
ANGULAR: MACH ± 1.0 BEND ±
ONE PLACE DECIMAL ±.030 [.76]
TWO PLACE DECIMAL ±.010 [.26]
THREE PLACE DECIMAL ±.005 [.13]

MILLTRONICS
CNC MACHINES
1400 MILL LANE 952.442.1410
WACONIA, MN 55387 USA

TITLE: LIFT OFF DOOR ASSEMBLY
SCALE: 1:12
DWG. NO. 10031028
ESTIMATED WEIGHT: 41.00 LBS.
STOCK/ASSY NO.
SHEET NO. 1 OF 1
SIZE B

Incomplete drawings at time of printing:

BR60/80-100” Auger Trough Assembly

BR60/80-150” Auger Trough Assembly

BR60-100” Enclosure Assembly – ATC Side

BR60-100” Enclosure Assembly - Operator Side

BR80-150” Enclosure Assembly – ATC Side

BR80-150” Enclosure Assembly – Operator Side

BR60-150” Enclosure Assembly – ATC Side

BR60-150” Enclosure Assembly - Operator Side

BR80-100” Enclosure Assembly – ATC Side

BR80-100” Enclosure Assembly – Operator Side